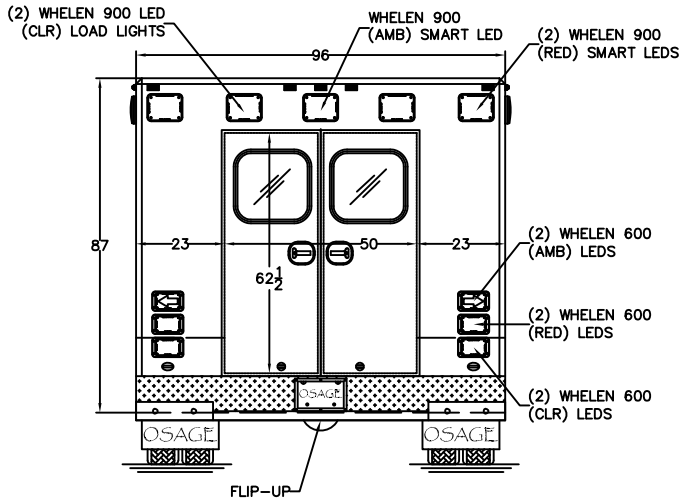

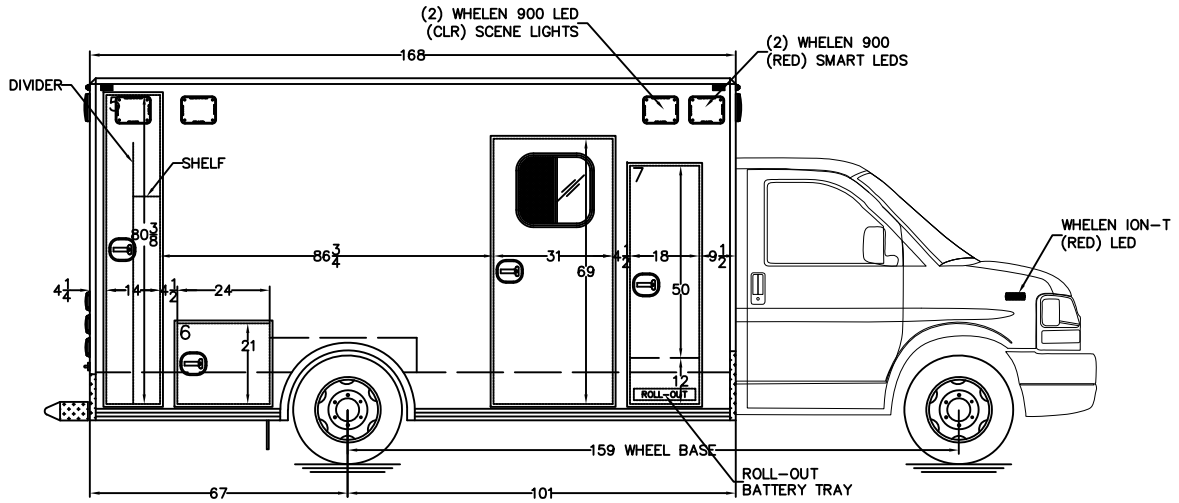

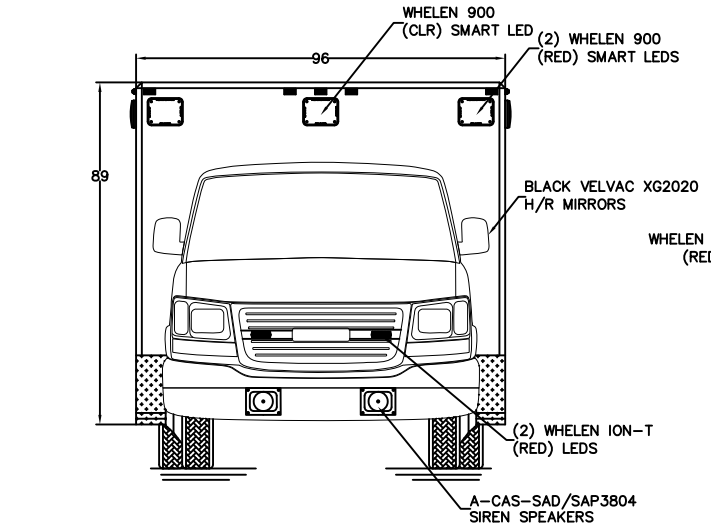

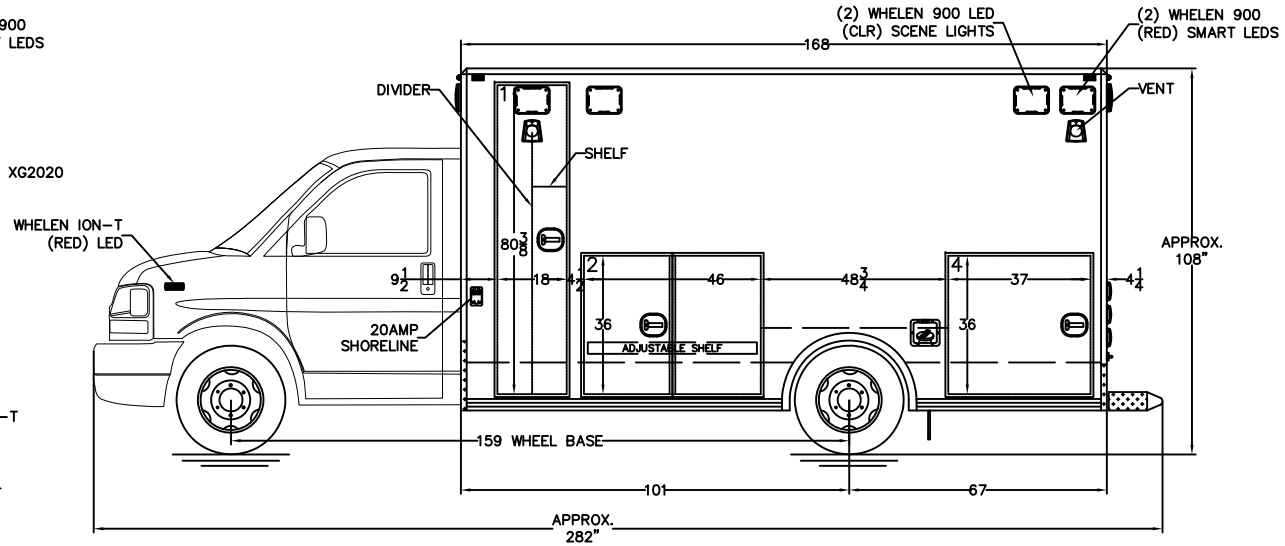

NOTES: THIS DRAWING IS NOT TO SCALE.
CHARACTERISTICS AND DIMENSIONS OF FINISHED PRODUCT MAY VARY.

NOTES:
1.) COMPARTMENT DIMENSIONS REFLECT OPENING CLEARANCE.
2.) APPROXIMATE COMPARTMENT DEPTH=19"DEEP.
3.) MODULE DIMENSIONS=168"L x 96"W x 89"H.
4.) INTERIOR MODULE HEAD ROOM=72"H.
5.) ALL 9x7 LIGHTS TO BE WHELEN 900 SERIES LIGHTS.
6.) DOUBLE STAINLESS THRESHOLDS.
7.) STYROFOAM INSULATION, WALLS & CEILING.

Rev.#	Revision Description	Date	Rev'd	App'vd
3				
2				
1	.	.	.	.

Stock/Job#: .	Drawing# 21-3-2168-SW-100	Cust. App'v/Date# .	Deal'r App'v/Date: .
Osage Dealer: .	Osage Industries, Inc.		
End Customer: .	TWIN RIDGE ROAD	P.O. BOX 718	LINN, MO. 65051
NOTICE	Drawn By: S.A.H.	Date: 06-05-19	Scale: NOT TO SCALE
This drawing and/or the information hereon is the exclusive property of Osage Industries and shall not be reproduced, used or disclosed without the authorized written consent of Osage Industries.	Drawing Description: EXTERIOR LAYOUT TYPE-III SUPER-WARRIOR, G4500		Revision# 1

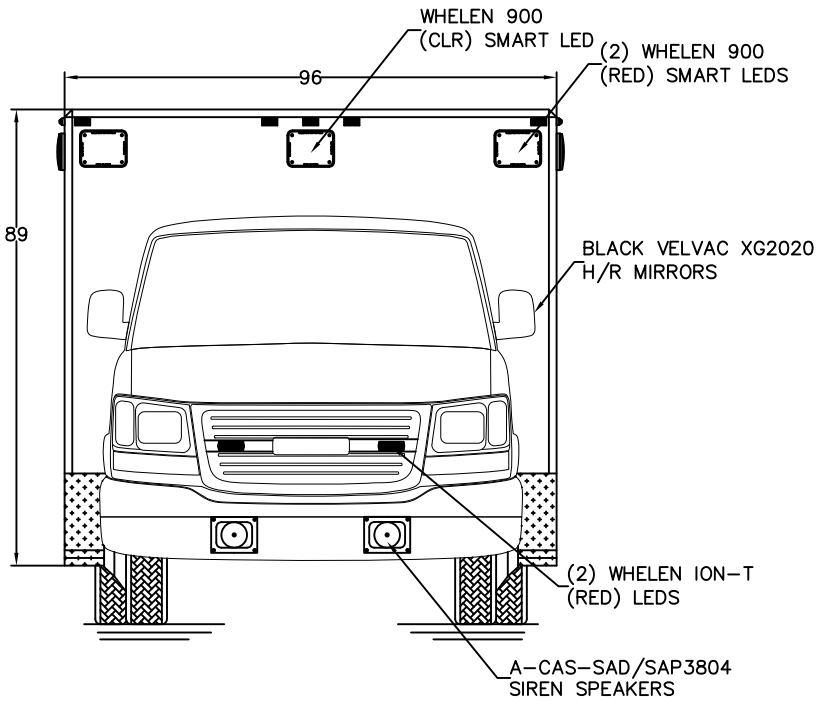

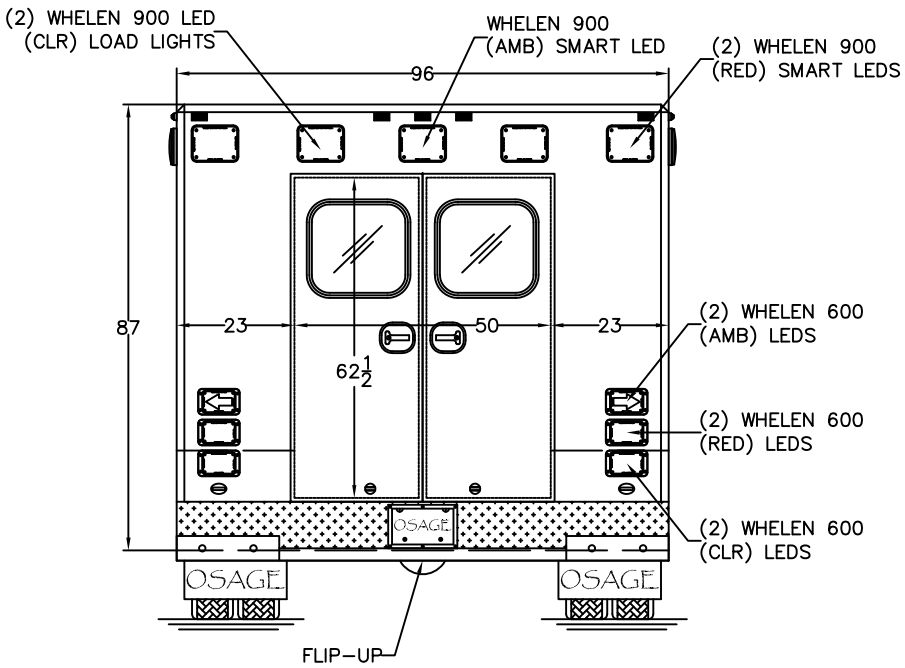

NOTES: THIS DRAWING IS NOT TO SCALE.
CHARACTERISTICS AND DIMENSIONS OF FINISHED PRODUCT MAY VARY.

NOTES:
1.) COMPARTMENT DIMENSIONS REFLECT OPENING CLEARANCE.
2.) APPROXIMATE COMPARTMENT DEPTH=19"DEEP.
3.) MODULE DIMENSIONS=168"L x 96"W x 89"H.
4.) INTERIOR MODULE HEAD ROOM=72"H.
5.) ALL 9x7 LIGHTS TO BE WHELEN 900 SERIES LIGHTS.
6.) DOUBLE STAINLESS THRESHOLDS.
7.) STYROFOAM INSULATION, WALLS & CEILING.

Rev.#	Revision Description	Date	Rev'd	App'vd
3				
2				
1	.	.	.	.

Stock/Job#:	Drawing# .21-3-2168-SW-100A	Cust. App'v/Date# .	Deal'r App'v/Date: .
Osage Dealer: .	Osage Industries, Inc.		
End Customer: .	TWIN RIDGE ROAD P.O. BOX 718 LINN, MO. 65051		
NOTICE	Drawn By: S.A.H.	Date: 06-10-20	Scale: NOT TO SCALE
This drawing and/or the information hereon is the exclusive property of Osage Industries and shall not be reproduced, used or disclosed without the authorized written consent of Osage Industries.	Drawing Description: EXTERIOR LAYOUT, FRONT/REAR TYPE-III SUPER-WARRIOR, G4500		Revision# 1

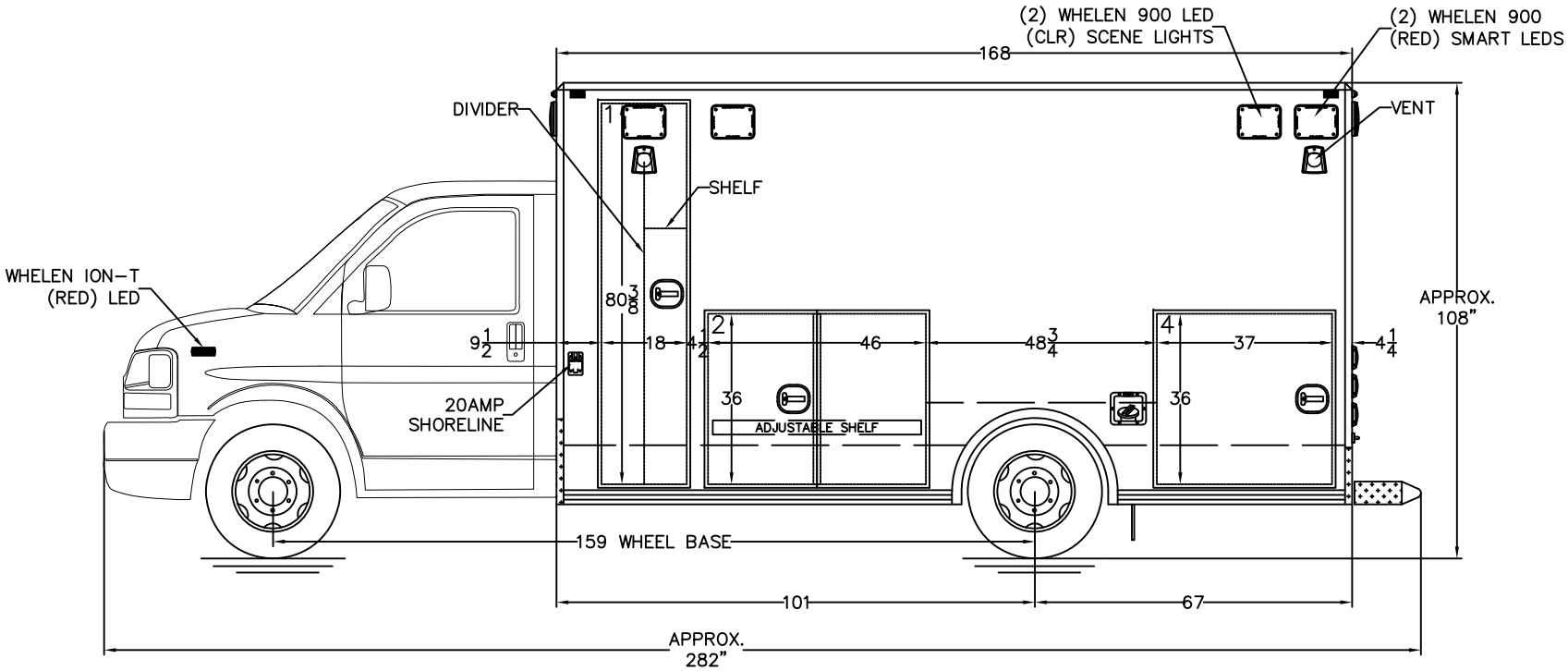

NOTES: THIS DRAWING IS NOT TO SCALE.
CHARACTERISTICS AND DIMENSIONS OF FINISHED PRODUCT MAY VARY.

NOTES:
1.) COMPARTMENT DIMENSIONS REFLECT OPENING CLEARANCE.
2.) APPROXIMATE COMPARTMENT DEPTH=19"DEEP.
3.) MODULE DIMENSIONS=168"L x 96"W x 89"H.
4.) INTERIOR MODULE HEAD ROOM=72"H.
5.) ALL 9x7 LIGHTS TO BE WHELEN 900 SERIES LIGHTS.
6.) DOUBLE STAINLESS THRESHOLDS.
7.) STYROFOAM INSULATION, WALLS & CEILING.

Rev.#	Revision Description	Date	Rev'd	App'vd
3				
2				
1	.	.	.	.

Stock/Job#:	Drawing# .21-3-2168-SW-100B	Cust. App'v/Date# .	Deal'r App'v/Date: .
Osage Dealer: .	Osage Industries, Inc.		
End Customer: .	TWIN RIDGE ROAD P.O. BOX 718 LINN, MO. 65051		
NOTICE	Drawn By: S.A.H.	Date: 06-10-20	Scale: NOT TO SCALE
This drawing and/or the information hereon is the exclusive property of Osage Industries and shall not be reproduced, used or disclosed without the authorized written consent of Osage Industries.	Drawing Description: EXTERIOR LAYOUT, STREETSIDE TYPE-III SUPER-WARRIOR, G4500		Revision# 1

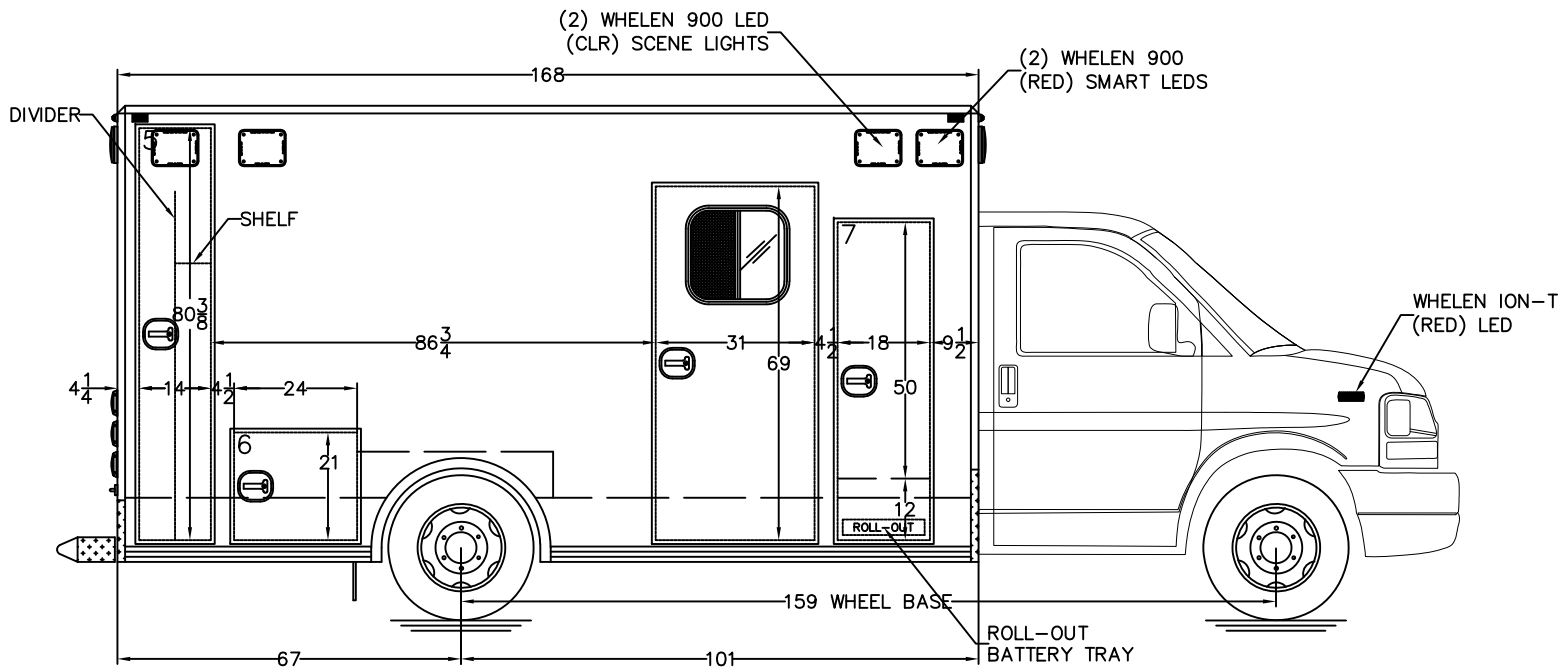

NOTES: THIS DRAWING IS NOT TO SCALE.
CHARACTERISTICS AND DIMENSIONS OF FINISHED PRODUCT MAY VARY.

NOTES:
1.) COMPARTMENT DIMENSIONS REFLECT OPENING CLEARANCE.
2.) APPROXIMATE COMPARTMENT DEPTH=19"DEEP.
3.) MODULE DIMENSIONS=168"L x 96"W x 89"H.
4.) INTERIOR MODULE HEAD ROOM=72"H.
5.) ALL 9x7 LIGHTS TO BE WHELEN 900 SERIES LIGHTS.
6.) DOUBLE STAINLESS THRESHOLDS.
7.) STYROFOAM INSULATION, WALLS & CEILING.

Rev.#	Revision Description	Date	Rev'd	App'vd
3				
2				
1	.	.	.	.

Stock/Job#:	Drawing# .21-3-2168-SW-100C	Cust. App'v/Date# .	Deal'r App'v/Date: .
Osage Dealer: .	Osage Industries, Inc.		
End Customer: .	TWIN RIDGE ROAD P.O. BOX 718 LINN, MO. 65051		
NOTICE	Drawn By: S.A.H.	Date: 06-10-20	Scale: NOT TO SCALE
This drawing and/or the information hereon is the exclusive property of Osage Industries and shall not be reproduced, used or disclosed without the authorized written consent of Osage Industries.	Drawing Description: EXTERIOR LAYOUT, CURBSIDE TYPE-III SUPER-WARRIOR, G4500		Revision# 1

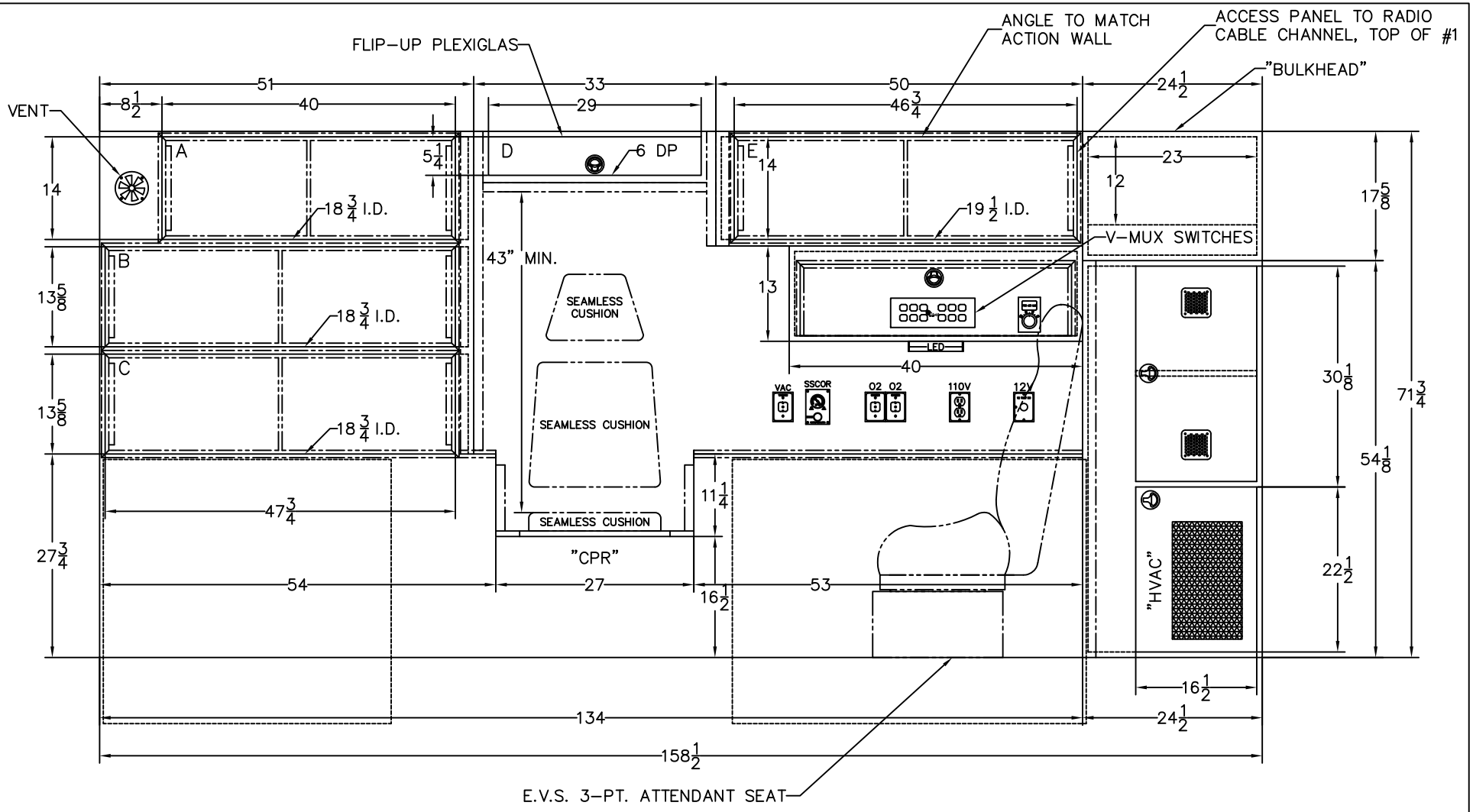

NOTES: THIS DRAWING IS NOT TO SCALE.
CHARACTERISTICS AND DIMENSIONS OF FINISHED PRODUCT MAY VARY.

NOTES: CABINET DEPTHS REPRESENT DIMENSION FROM INSIDE REAR TO FRONT FACE OF CABINETS, WITHOUT TRIM. ACTUAL WORKING DEPTH WILL BE LESS THAN DIMENSION SHOWN UNLESS OTHERWISE SPECIFIED.

Rev.#	Revision Description	Date	Rev'd	App'vd
3				
2				
1	.	.	.	.

Stock/Job#: .	Drawing# 21-3-2168-SW-101	Cust. App'v/Date# .	Deal'r App'v/Date: .
Osage Dealer: .	Osage Industries, Inc.		
End Customer: .	TWIN RIDGE ROAD P.O. BOX 718 LINN, MO. 65051		
NOTICE	Drawn By: S.A.H.	Date: 06-10-20	Scale: NOT TO SCALE
This drawing and/or the information hereon is the exclusive property of Osage Industries and shall not be reproduced, used or disclosed without the authorized written consent of Osage Industries.	Drawing Description: STREETSIDE INTERIOR TYPE-III SUPER-WARRIOR, G4500		Revision# 1

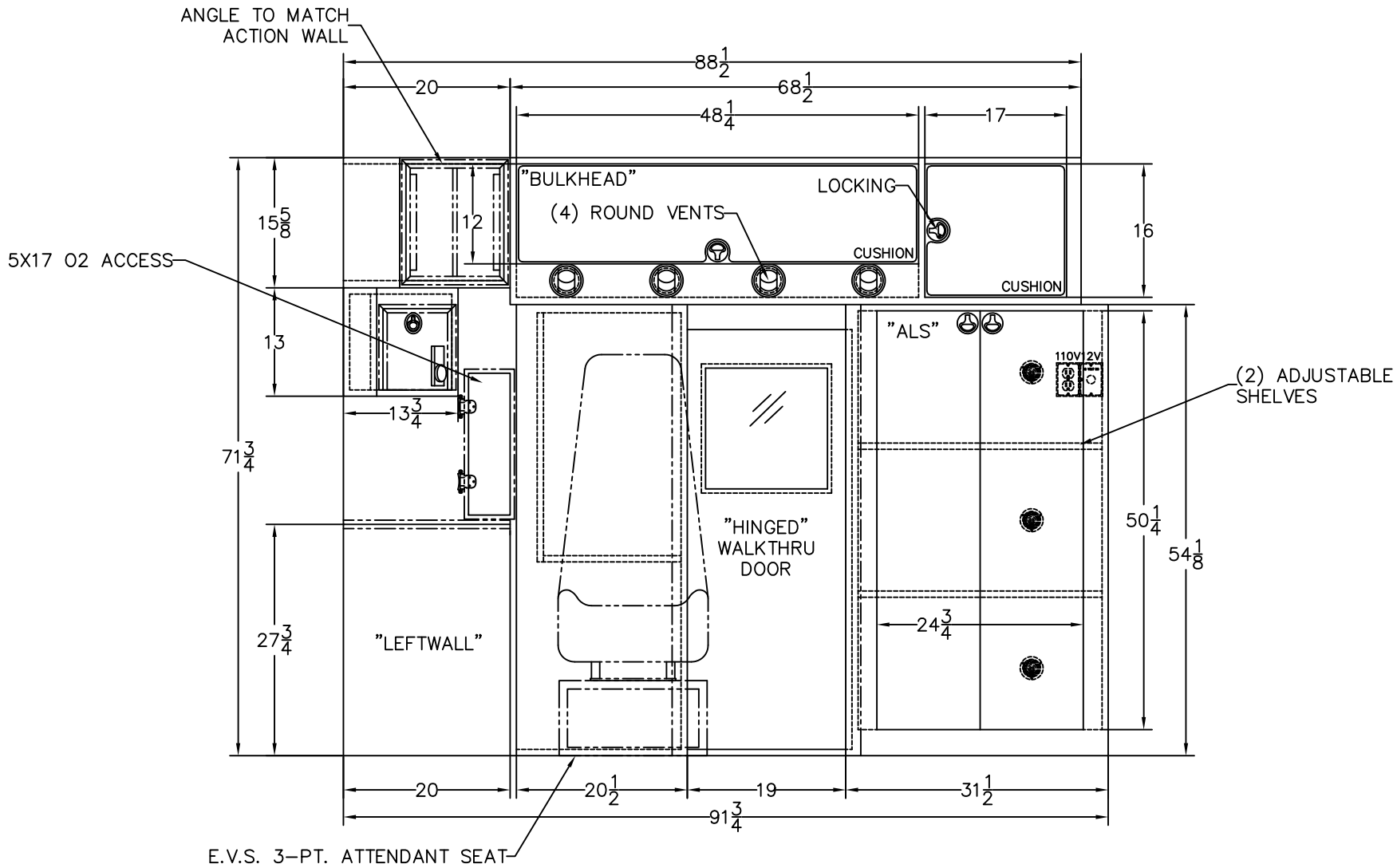

NOTES: THIS DRAWING IS NOT TO SCALE.
CHARACTERISTICS AND DIMENSIONS OF FINISHED PRODUCT MAY VARY.

NOTES: CABINET DEPTHS REPRESENT DIMENSION FROM INSIDE REAR TO FRONT FACE OF CABINETS, WITHOUT TRIM. ACTUAL WORKING DEPTH WILL BE LESS THAN DIMENSION SHOWN UNLESS OTHERWISE SPECIFIED.

Rev.#	Revision Description	Date	Rev'd	App'vd
3				
2				
1	.	.	.	.

Stock/Job#: .	Drawing# 21-3-2168-SW-102	Cust. App'v/Date# .	Deal'r App'v/Date: .
Osage Dealer: .	Osage Industries, Inc.		
End Customer: .	TWIN RIDGE ROAD P.O. BOX 718 LINN, MO. 65051		
NOTICE	Drawn By: S.A.H.	Date: 06-10-20	Scale: NOT TO SCALE
This drawing and/or the information hereon is the exclusive property of Osage Industries and shall not be reproduced, used or disclosed without the authorized written consent of Osage Industries.	Drawing Description: FORWARD INTERIOR TYPE-III SUPER-WARRIOR, G4500		Revision# 1

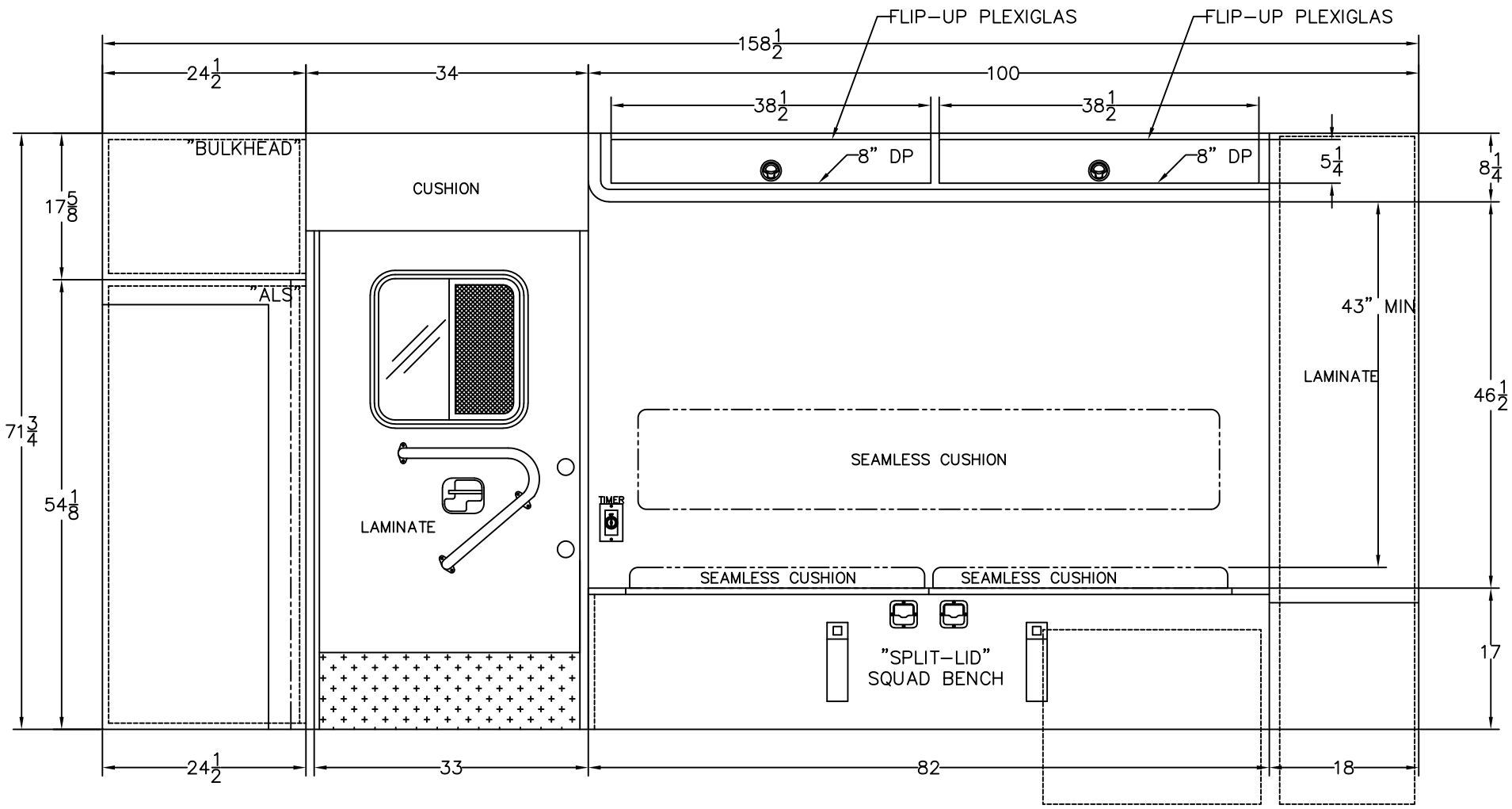

NOTES: THIS DRAWING IS NOT TO SCALE.
CHARACTERISTICS AND DIMENSIONS OF FINISHED PRODUCT MAY VARY.

NOTES: CABINET DEPTHS REPRESENT DIMENSION FROM INSIDE REAR TO FRONT FACE OF CABINETS, WITHOUT TRIM. ACTUAL WORKING DEPTH WILL BE LESS THAN DIMENSION SHOWN UNLESS OTHERWISE SPECIFIED.

Rev.#	Revision Description	Date	Rev'd	App'vd
3				
2				
1	.	.	.	.

Stock/Job#: .	Drawing# 21–3–2168–SW–103	Cust. App'v/Date# .	Deal'r App'v/Date: .
Osage Dealer: .	Osage Industries, Inc.		
End Customer: .	TWIN RIDGE ROAD P.O. BOX 718 LINN, MO. 65051		
NOTICE	Drawn By: S.A.H.	Date: 06–10–20	Scale: NOT TO SCALE
This drawing and/or the information hereon is the exclusive property of Osage Industries and shall not be reproduced, used or disclosed without the authorized written consent of Osage Industries.	Drawing Description: CURBSIDE INTERIOR TYPE–III SUPER–WARRIOR, G4500		Revision# 1

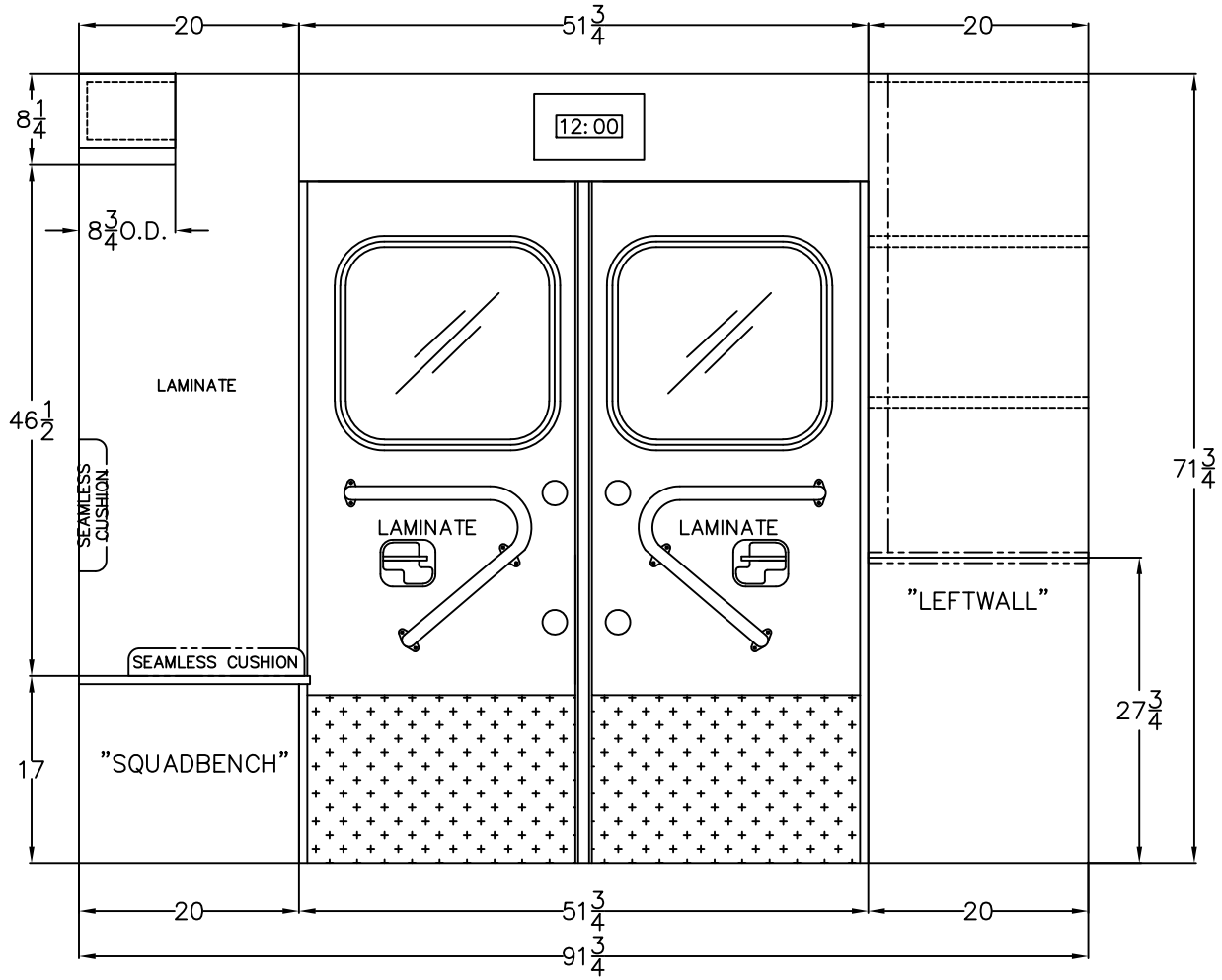

NOTES: THIS DRAWING IS NOT TO SCALE.
CHARACTERISTICS AND DIMENSIONS OF FINISHED PRODUCT MAY VARY.

NOTES: CABINET DEPTHS REPRESENT DIMENSION FROM INSIDE REAR TO FRONT FACE OF CABINETS, WITHOUT TRIM. ACTUAL WORKING DEPTH WILL BE LESS THAN DIMENSION SHOWN UNLESS OTHERWISE SPECIFIED.

Rev.#	Revision Description	Date	Rev'd	App'vd
3				
2				
1	.	.	.	.

Stock/Job#: .	Drawing# 21-3-2168-SW-104	Cust. App'v/Date# .	Deal'r App'v/Date: .
Osage Dealer: .	Osage Industries, Inc.		
End Customer: .	TWIN RIDGE ROAD P.O. BOX 718 LINN, MO. 65051		
NOTICE	Drawn By: S.A.H.	Date: 06-10-20	Scale: NOT TO SCALE
This drawing and/or the information hereon is the exclusive property of Osage Industries and shall not be reproduced, used or disclosed without the authorized written consent of Osage Industries.	Drawing Description: REARWARD INTERIOR TYPE-III SUPER-WARRIOR, G4500		Revision# 1

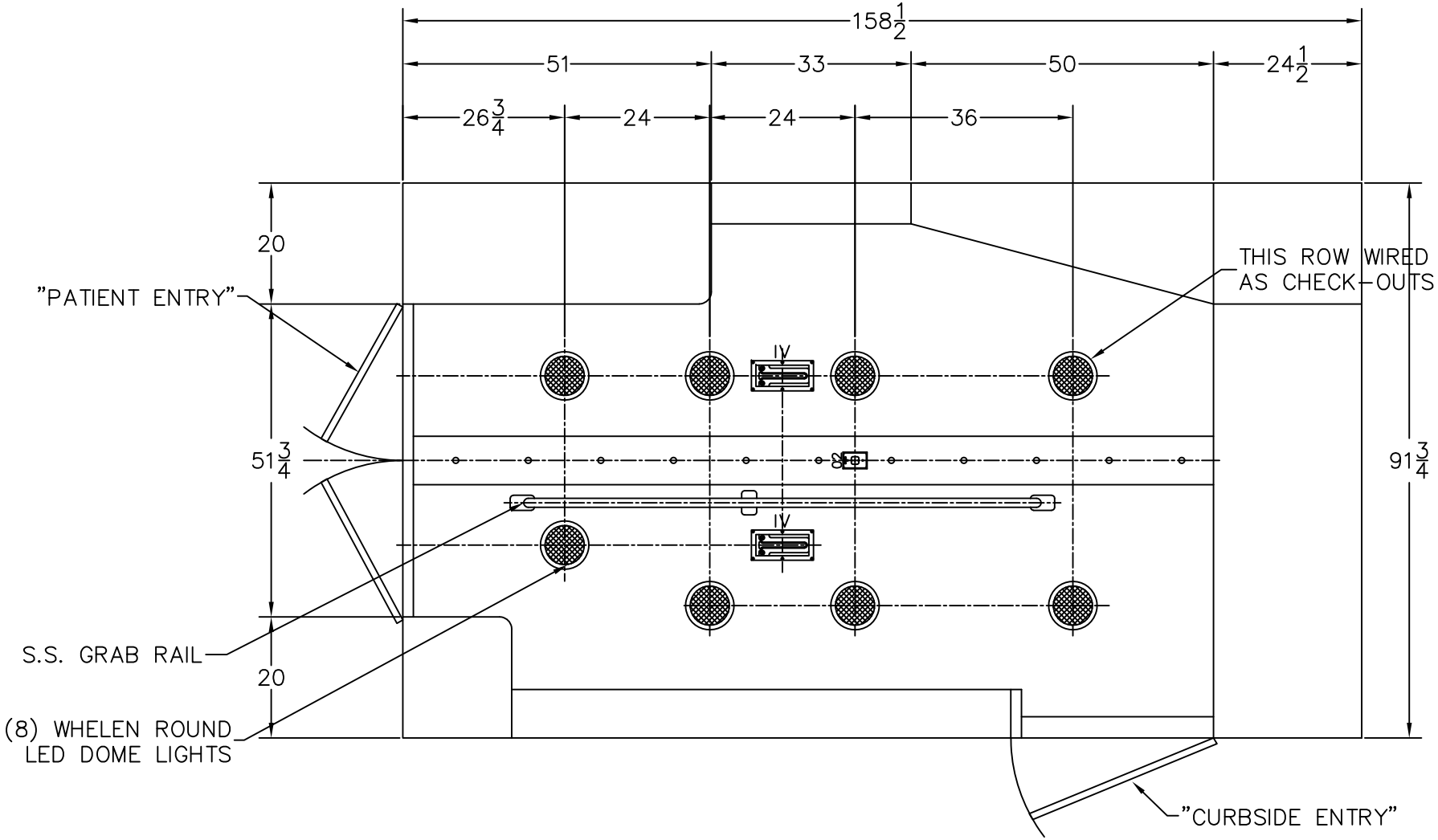

NOTES: THIS DRAWING IS NOT TO SCALE. CHARACTERISTICS AND DIMENSIONS OF FINISHED PRODUCT MAY VARY.

Rev.#	Revision Description	Date	Rev'd	App'vd
3				
2				
1	.	.	.	.

Stock/Job#: .	Drawing# 21-3-2168-SW-105	Cust. App'v/Date# .	Deal'r App'v/Date: .
Osage Dealer: .	Osage Industries, Inc.		
End Customer: .	TWIN RIDGE ROAD P.O. BOX 718 LINN, MO. 65051		
NOTICE	Drawn By: S.A.H.	Date: 06-10-20	Scale: NOT TO SCALE
This drawing and/or the information hereon is the exclusive property of Osage Industries and shall not be reproduced, used or disclosed without the authorized written consent of Osage Industries.	Drawing Description: CEILING LAYOUT TYPE-III SUPER-WARRIOR, G4500		Revision# 1

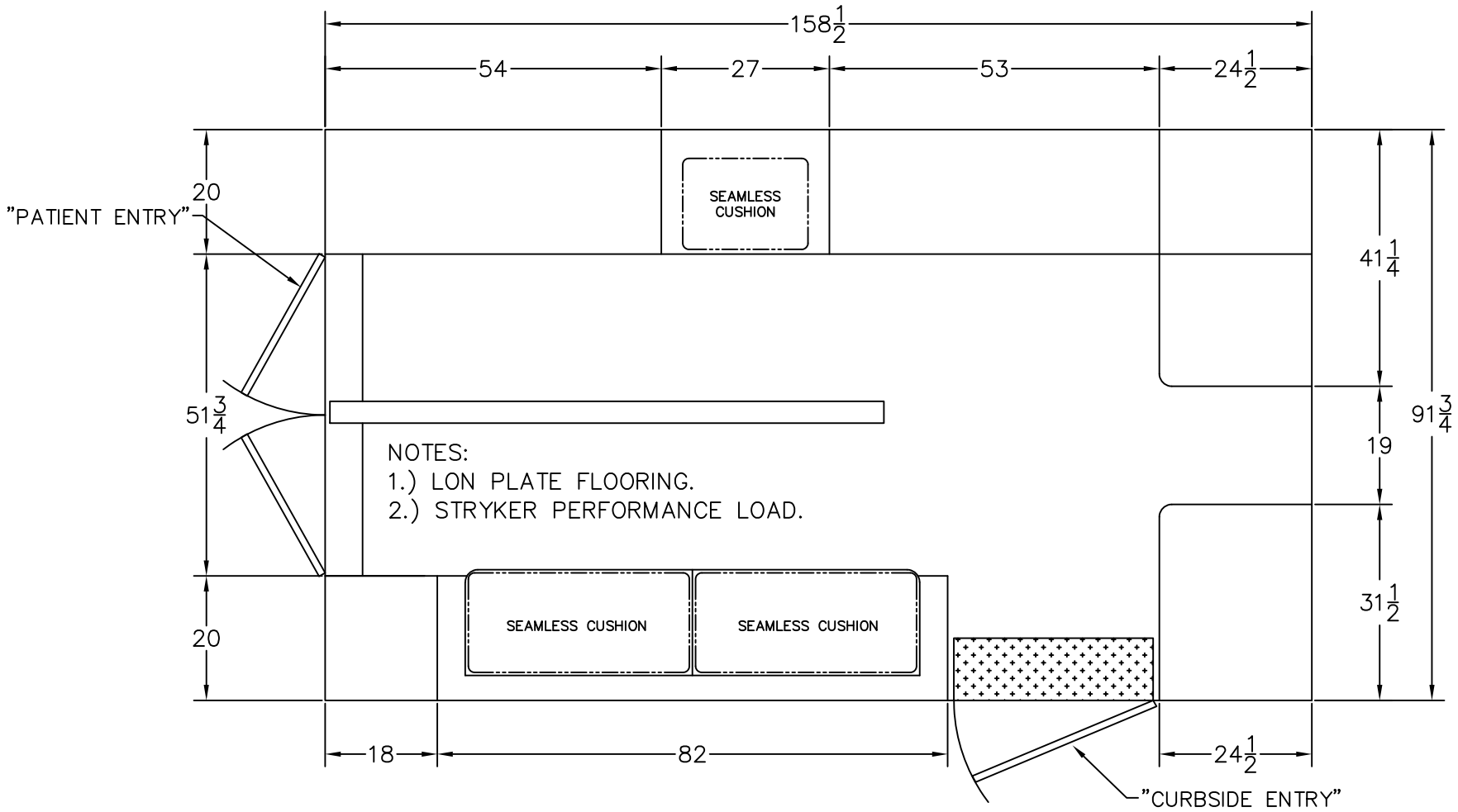

NOTES: THIS DRAWING IS NOT TO SCALE.
CHARACTERISTICS AND DIMENSIONS OF FINISHED PRODUCT MAY VARY.

Rev.#	Revision Description	Date	Rev'd	App'vd
3				
2				
1	.	.	.	.

Stock/Job#: .	Drawing# 21-3-2168-SW-106	Cust. App'v/Date# .	Deal'r App'v/Date: .
Osage Dealer: .	Osage Industries, Inc.		
End Customer: .	TWIN RIDGE ROAD P.O. BOX 718 LINN, MO. 65051		
NOTICE	Drawn By: S.A.H.	Date: 06-10-20	Scale: NOT TO SCALE
This drawing and/or the information hereon is the exclusive property of Osage Industries and shall not be reproduced, used or disclosed without the authorized written consent of Osage Industries.	Drawing Description: FLOOR LAYOUT TYPE-III SUPER-WARRIOR, G4500		Revision# 1