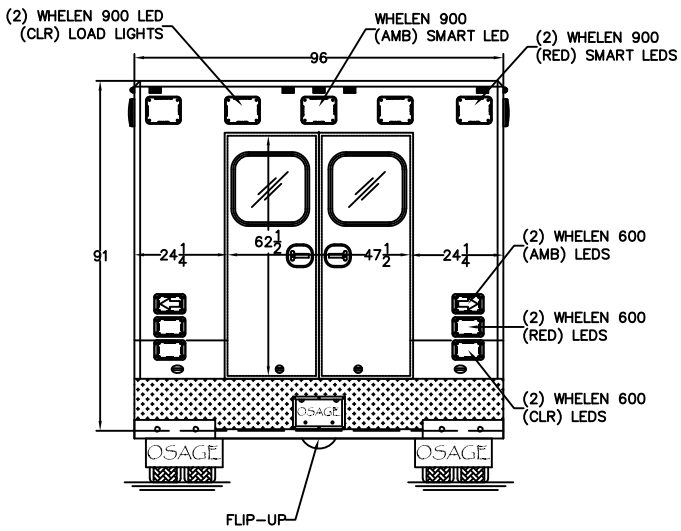

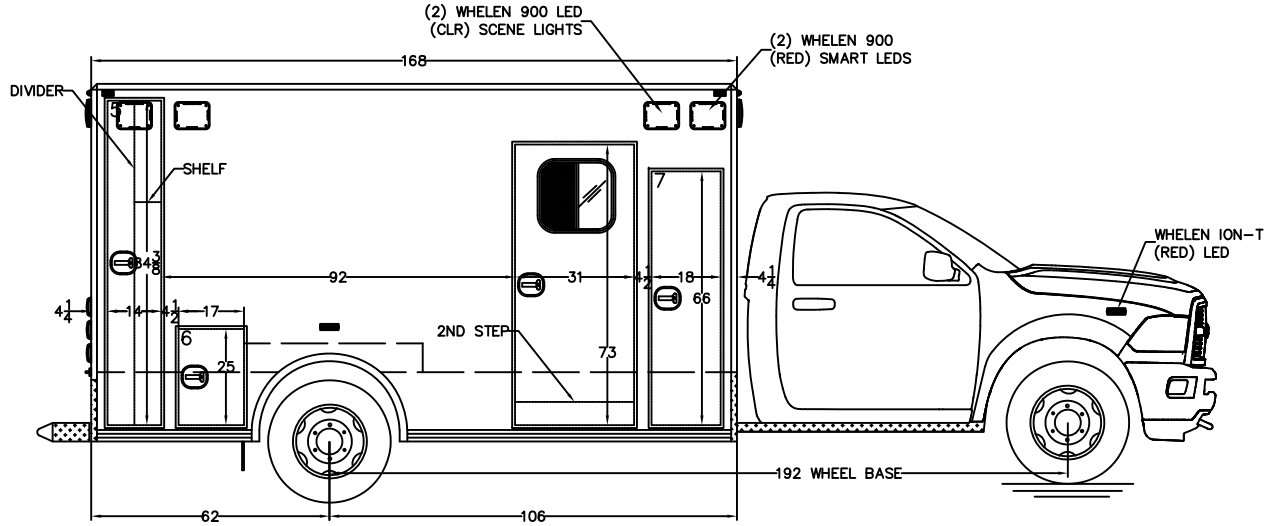

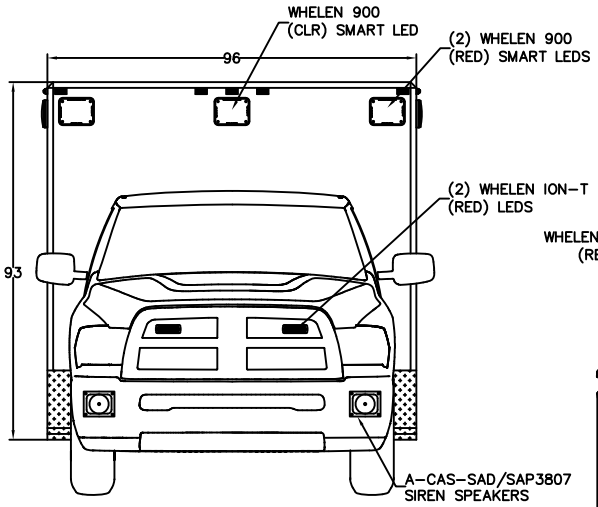

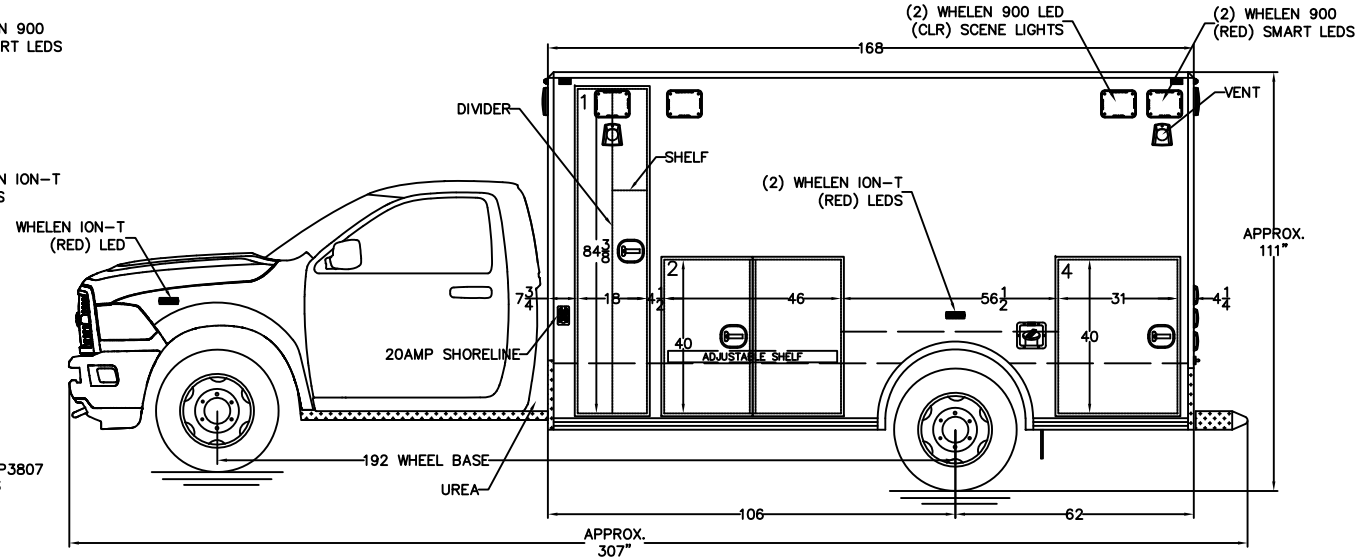

NOTES: THIS DRAWING IS NOT TO SCALE.
CHARACTERISTICS AND DIMENSIONS OF FINISHED PRODUCT MAY VARY.

NOTES:
1.) COMPARTMENT DIMENSIONS REFLECT OPENING CLEARANCE.
2.) APPROXIMATE COMPARTMENT DEPTH=20 1/2"DEEP.
3.) MODULE DIMENSIONS=168"L x 96"W x 93"H
4.) INTERIOR MODULE HEAD ROOM=72"H.
5.) ALL 9x7 LIGHTS TO BE WHELEN 900 SERIES LIGHTS.
6.) DOUBLE STAINLESS THRESHOLDS.
7.) STYROFOAM INSULATION, WALLS & CEILING.

Rev.#	Revision Description	Date	Rev'd	App'vd
3				
2				
1	.	.	.	.

Stock/Job#: .	Drawing# 23-1-2168-SW-100	Cust. App'v/Date# .	Deal'r App'v/Date: .
Osage Dealer: .	Osage Industries, Inc.		
End Customer: .	TWIN RIDGE ROAD P.O. BOX 718 LINN, MO. 65051		
NOTICE	Drawn By: S.A.H.	Date: 11-15-21	Scale: NOT TO SCALE
This drawing and/or the information hereon is the exclusive property of Osage Industries and shall not be reproduced, used or disclosed without the authorized written consent of Osage Industries.	Drawing Description: EXTERIOR LAYOUT TYPE-I SUPER-WARRIOR		Revision# 1

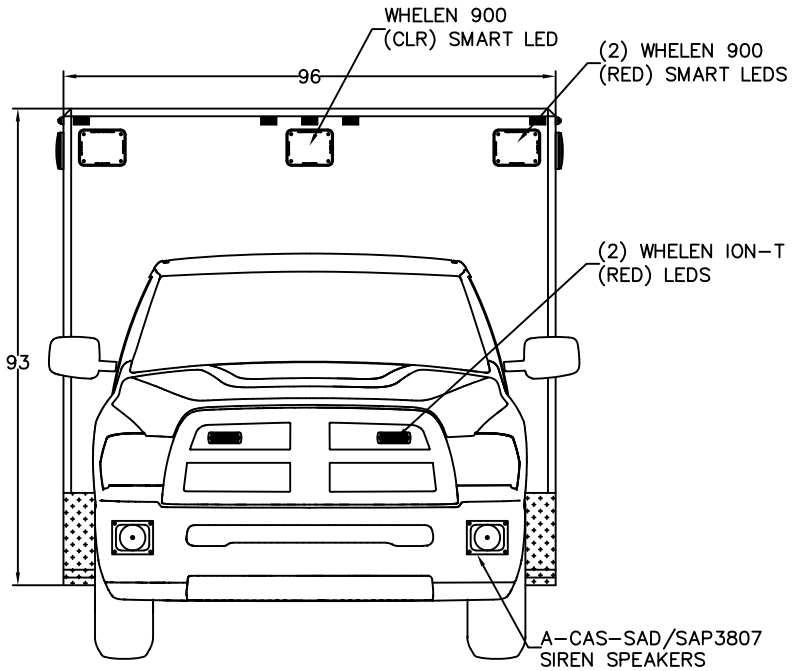

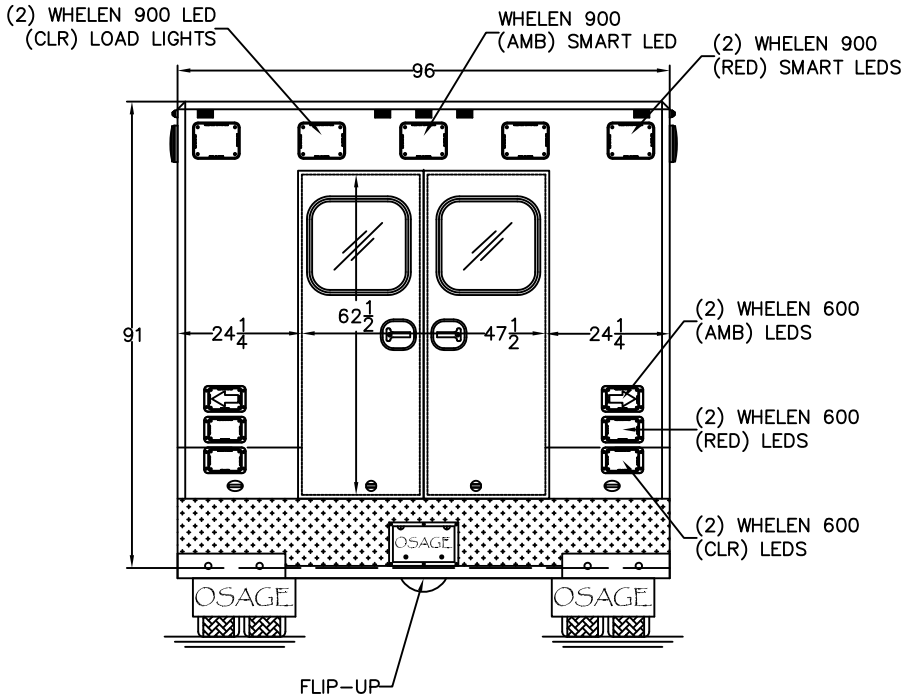

NOTES: THIS DRAWING IS NOT TO SCALE.
CHARACTERISTICS AND DIMENSIONS OF FINISHED PRODUCT MAY VARY.

NOTES:
1.) COMPARTMENT DIMENSIONS REFLECT OPENING CLEARANCE.
2.) APPROXIMATE COMPARTMENT DEPTH=20 1/2"DEEP.
3.) MODULE DIMENSIONS=168"L x 96"W x 93"H
4.) INTERIOR MODULE HEAD ROOM=72"H.
5.) ALL 9x7 LIGHTS TO BE WHELEN 900 SERIES LIGHTS.
6.) DOUBLE STAINLESS THRESHOLDS.
7.) STYROFOAM INSULATION, WALLS & CEILING.

Stock/Job#:	Drawing# .23-1-2168-SW-100A	Cust. App'v/Date# .	Deal'r App'v/Date: .
Osage Dealer: .	Osage Industries, Inc.		
End Customer: .	TWIN RIDGE ROAD P.O. BOX 718 LINN, MO. 65051		
NOTICE	Drawn By: S.A.H.	Date: 11-15-21	Scale: NOT TO SCALE
This drawing and/or the information hereon is the exclusive property of Osage Industries and shall not be reproduced, used or disclosed without the authorized written consent of Osage Industries.	Drawing Description: EXTERIOR LAYOUT, FRONT/REAR TYPE-I SUPER-WARRIOR		Revision# 1

Rev.#	Revision Description	Date	Rev'd	App'vd
3				
2				
1	.	.	.	.

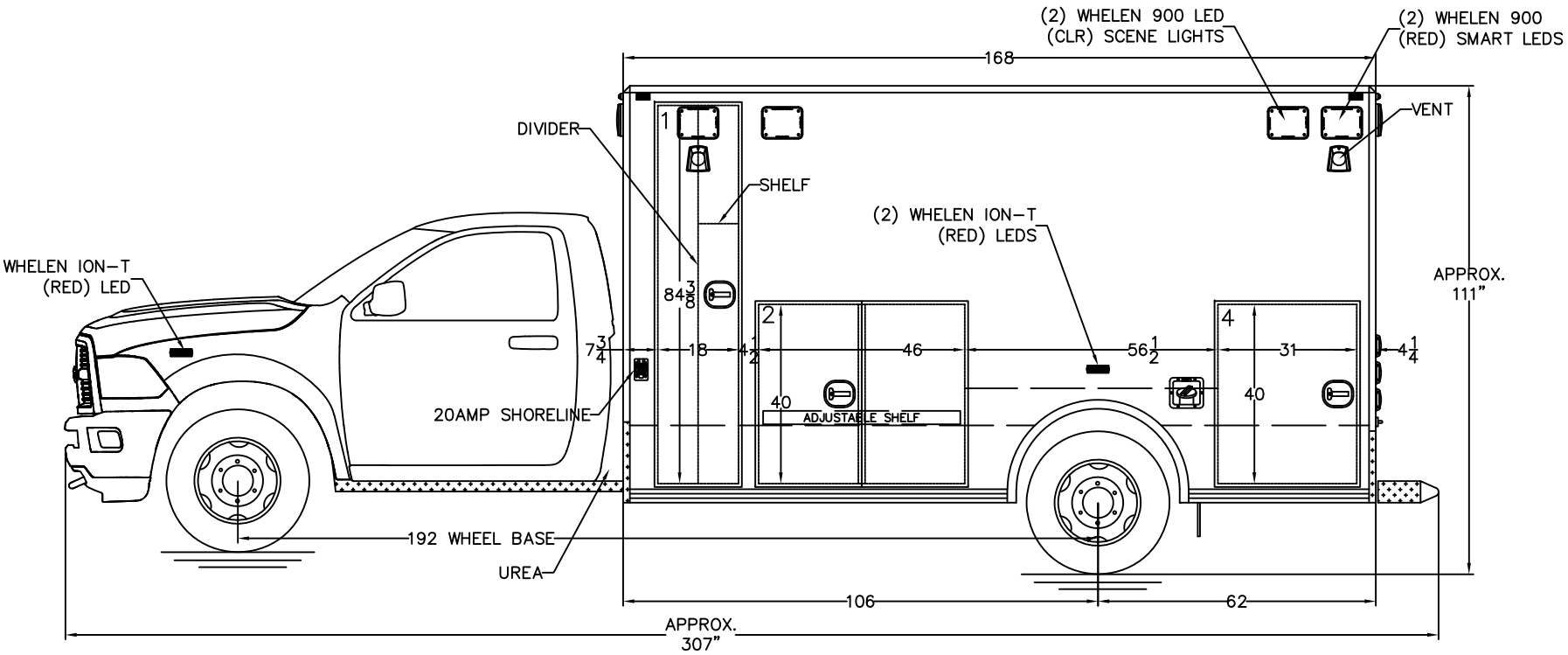

NOTES: THIS DRAWING IS NOT TO SCALE.
CHARACTERISTICS AND DIMENSIONS OF FINISHED PRODUCT MAY VARY.

NOTES:
1.) COMPARTMENT DIMENSIONS REFLECT OPENING CLEARANCE.
2.) APPROXIMATE COMPARTMENT DEPTH=20 1/2"DEEP.
3.) MODULE DIMENSIONS=168"L x 96"W x 93"H
4.) INTERIOR MODULE HEAD ROOM=72"H.
5.) ALL 9x7 LIGHTS TO BE WHELEN 900 SERIES LIGHTS.
6.) DOUBLE STAINLESS THRESHOLDS.
7.) STYROFOAM INSULATION, WALLS & CEILING.

Rev.#	Revision Description	Date	Rev'd	App'vd
3				
2				
1	.	.	.	.

Stock/Job#:	Drawing# .23–1–2168–SW–100B	Cust. App'v/Date# .	Deal'r App'v/Date: .
Osage Dealer: .	Osage Industries, Inc.		
End Customer: .	TWIN RIDGE ROAD P.O. BOX 718 LINN, MO. 65051		
NOTICE	Drawn By: S.A.H.	Date: 11–15–21	Scale: NOT TO SCALE
This drawing and/or the information hereon is the exclusive property of Osage Industries and shall not be reproduced, used or disclosed without the authorized written consent of Osage Industries.	Drawing Description: EXTERIOR LAYOUT, STREETSIDE TYPE–I SUPER–WARRIOR		Revision# 1

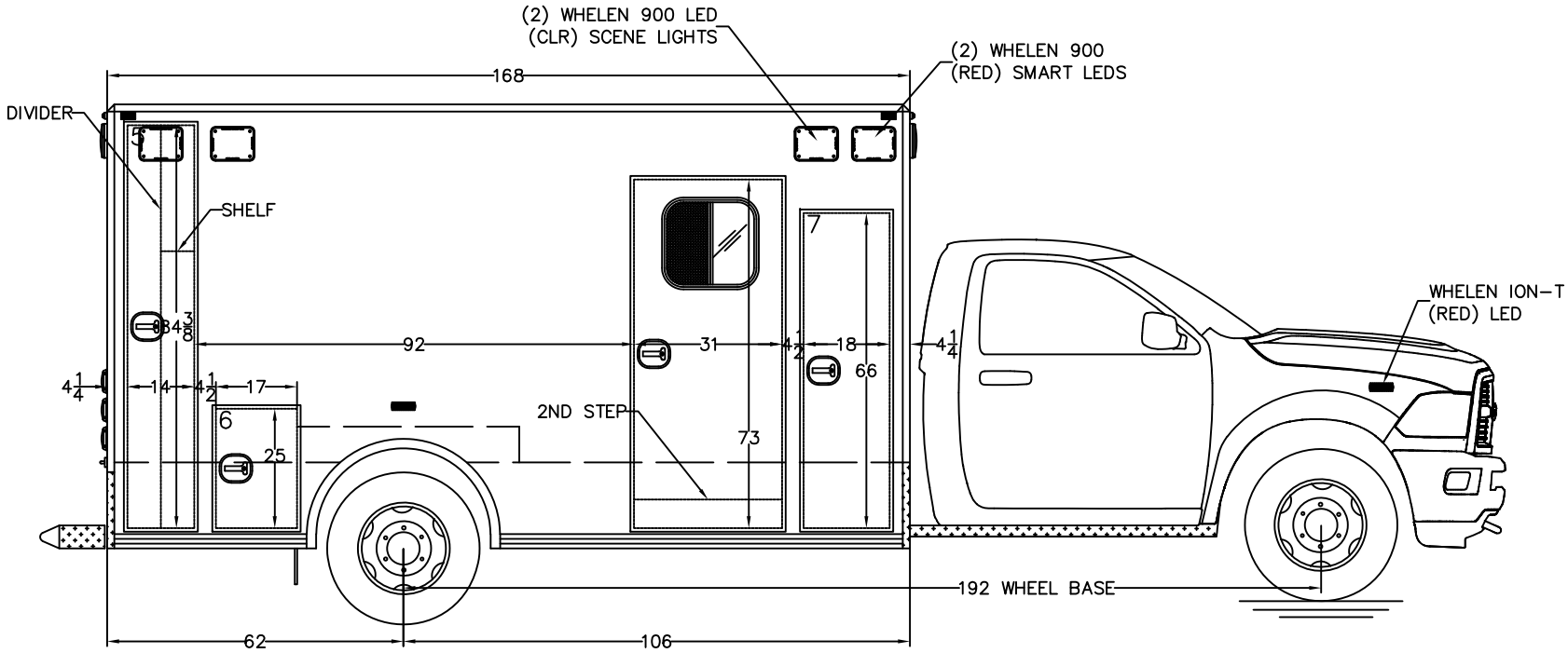

NOTES: THIS DRAWING IS NOT TO SCALE.
CHARACTERISTICS AND DIMENSIONS OF FINISHED PRODUCT MAY VARY.

NOTES:
1.) COMPARTMENT DIMENSIONS REFLECT OPENING CLEARANCE.
2.) APPROXIMATE COMPARTMENT DEPTH=20 1/2"DEEP.
3.) MODULE DIMENSIONS=168"L x 96"W x 93"H
4.) INTERIOR MODULE HEAD ROOM=72"H.
5.) ALL 9x7 LIGHTS TO BE WHELEN 900 SERIES LIGHTS.
6.) DOUBLE STAINLESS THRESHOLDS.
7.) STYROFOAM INSULATION, WALLS & CEILING.

Rev.#	Revision Description	Date	Rev'd	App'vd
3				
2				
1	.	.	.	.

Stock/Job#:	Drawing# .23-1-2168-SW-100C	Cust. App'v/Date# .	Deal'r App'v/Date: .
Osage Dealer: .	Osage Industries, Inc.		
End Customer: .	TWIN RIDGE ROAD P.O. BOX 718 LINN, MO. 65051		
NOTICE	Drawn By: S.A.H.	Date: 11-15-21	Scale: NOT TO SCALE
This drawing and/or the information hereon is the exclusive property of Osage Industries and shall not be reproduced, used or disclosed without the authorized written consent of Osage Industries.	Drawing Description: EXTERIOR LAYOUT, CURBSIDE TYPE-I SUPER-WARRIOR		Revision# 1

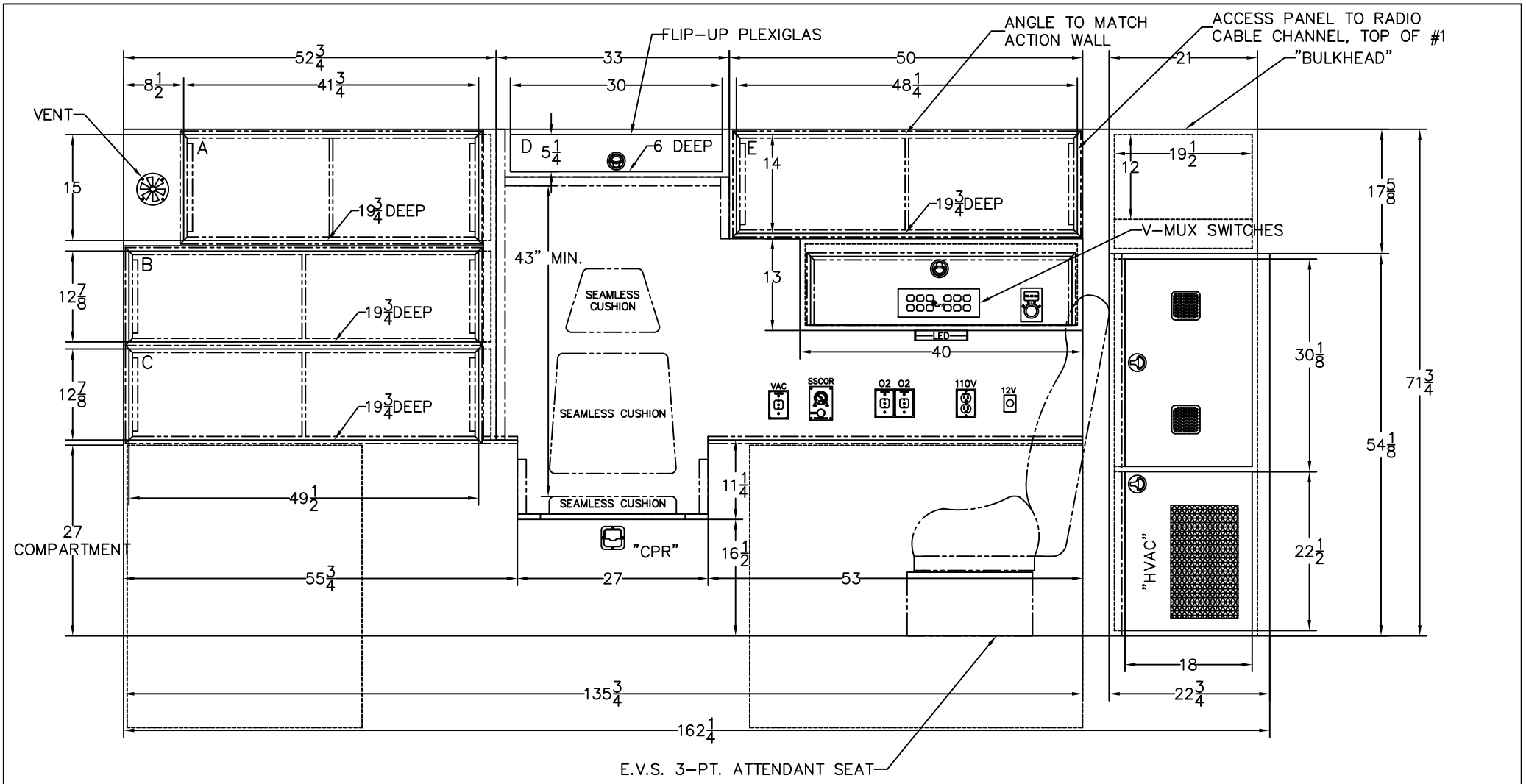

NOTES: THIS DRAWING IS NOT TO SCALE.
CHARACTERISTICS AND DIMENSIONS OF FINISHED PRODUCT MAY VARY.

NOTES: CABINET DEPTHS REPRESENT DIMENSION FROM INSIDE REAR TO FRONT FACE OF CABINETS, WITHOUT TRIM. ACTUAL WORKING DEPTH WILL BE LESS THAN DIMENSION SHOWN UNLESS OTHERWISE SPECIFIED.

Rev.#	Revision Description	Date	Rev'd	App'vd
3				
2				
1	.	.	.	.

Stock/Job#: .	Drawing# 23-1-2168-SW-101	Cust. App'v/Date# .	Deal'r App'v/Date: .
Osage Dealer: .	Osage Industries, Inc.		
End Customer: .	TWIN RIDGE ROAD P.O. BOX 718 LINN, MO. 65051		
NOTICE	Drawn By: S.A.H.	Date: 11-15-21	Scale: NOT TO SCALE
This drawing and/or the information hereon is the exclusive property of Osage Industries and shall not be reproduced, used or disclosed without the authorized written consent of Osage Industries.	Drawing Description: STREETSIDE INTERIOR TYPE-I SUPER-WARRIOR		Revision# 1

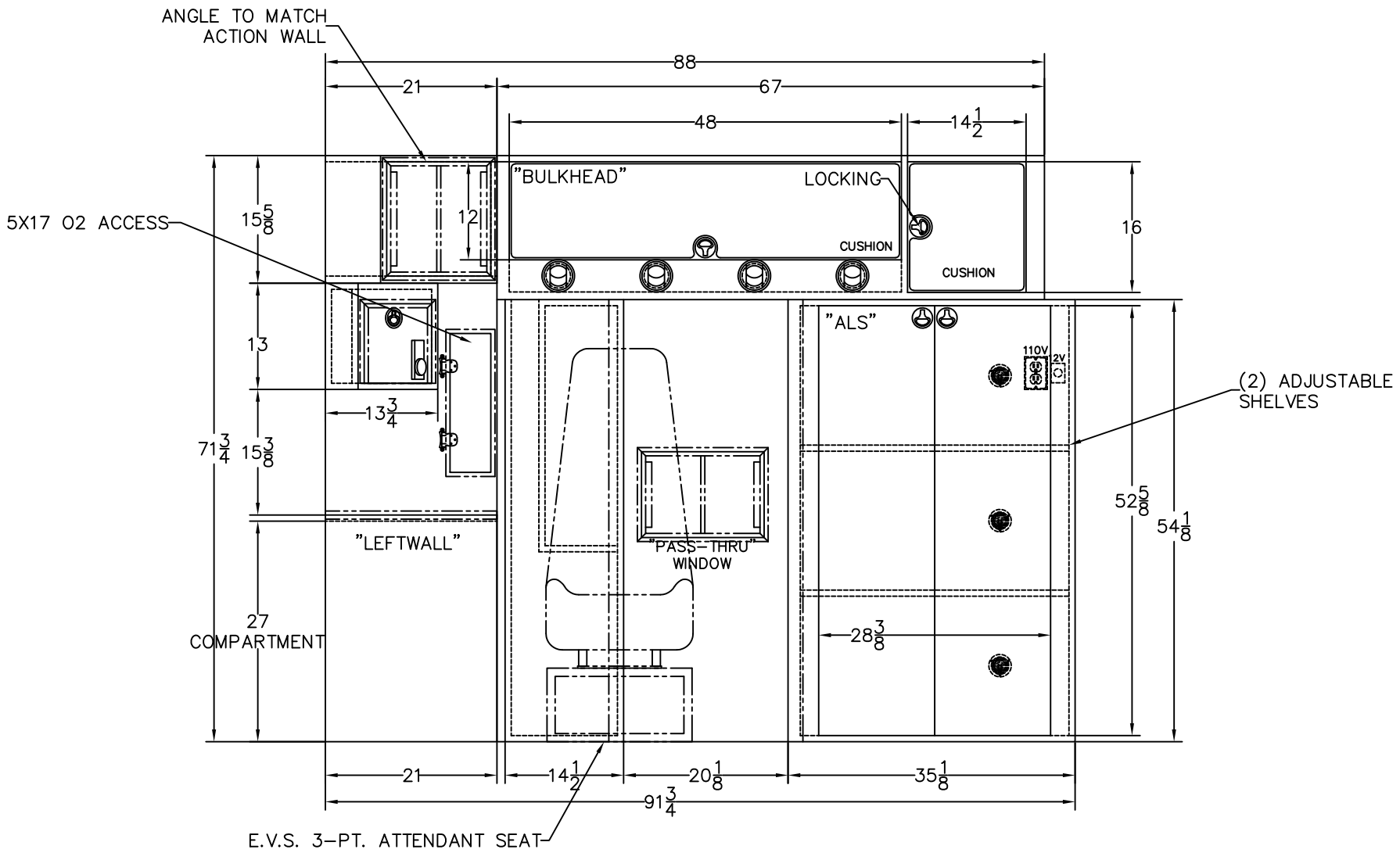

NOTES: THIS DRAWING IS NOT TO SCALE.
CHARACTERISTICS AND DIMENSIONS OF FINISHED PRODUCT MAY VARY.

NOTES: CABINET DEPTHS REPRESENT DIMENSION FROM INSIDE REAR TO FRONT FACE OF CABINETS, WITHOUT TRIM. ACTUAL WORKING DEPTH WILL BE LESS THAN DIMENSION SHOWN UNLESS OTHERWISE SPECIFIED.

Stock/Job#:	Drawing# 23-1-2168-SW-102	Cust. App'v/Date#	Deal'r App'v/Date:
Osage Dealer:	Osage Industries, Inc.		
End Customer:	TWIN RIDGE ROAD P.O. BOX 718 LINN, MO. 65051		
NOTICE	Drawn By: S.A.H.	Date: 11-15-21	Scale: NOT TO SCALE
This drawing and/or the information hereon is the exclusive property of Osage Industries and shall not be reproduced, used or disclosed without the authorized written consent of Osage Industries.	Drawing Description: FORWARD INTERIOR TYPE-I SUPER-WARRIOR		Revision# 1

Rev.#	Revision Description	Date	Rev'd	App'vd
3				
2				
1	.	.	.	.

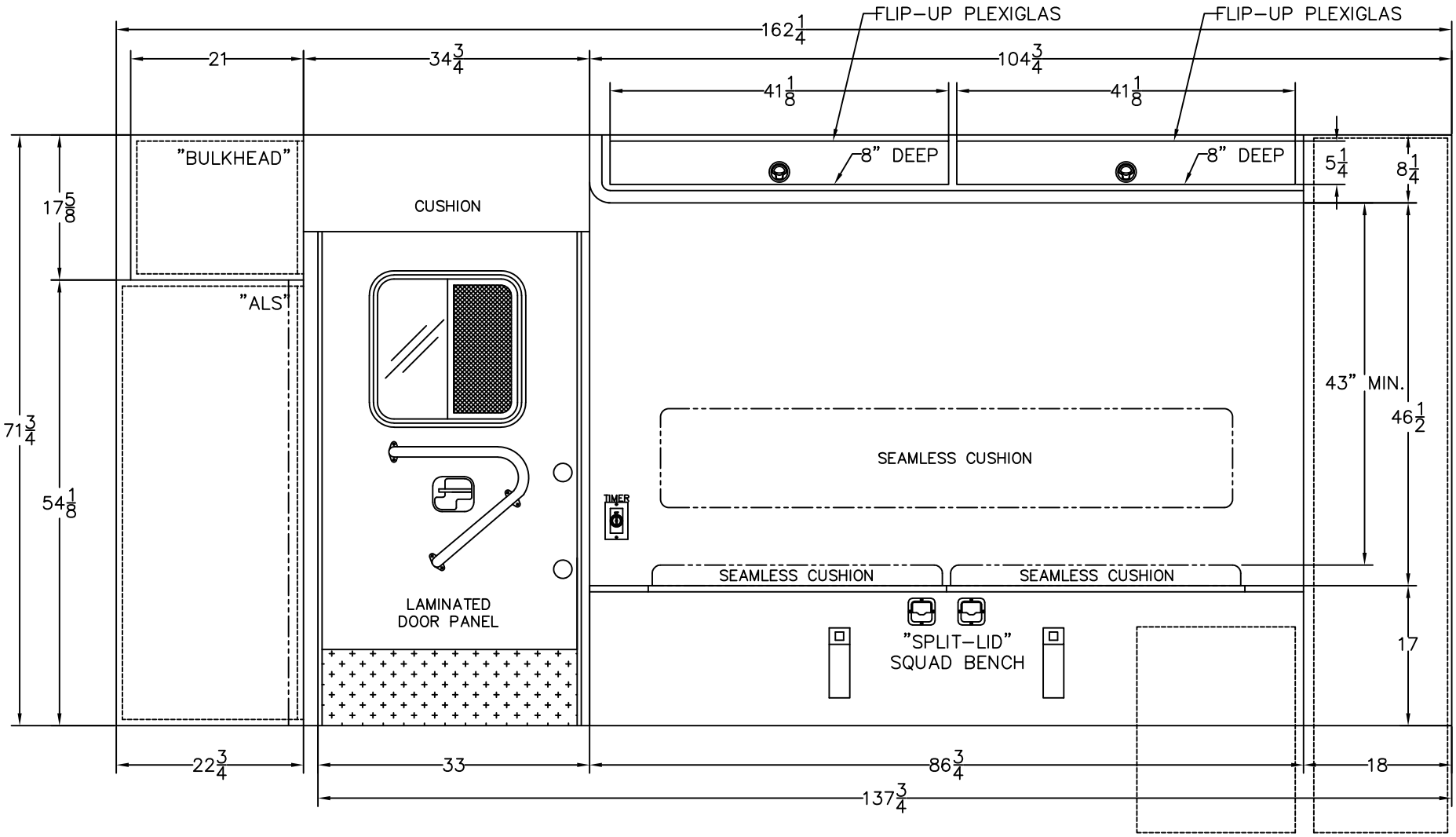

NOTES: THIS DRAWING IS NOT TO SCALE.
CHARACTERISTICS AND DIMENSIONS OF FINISHED PRODUCT MAY VARY.

NOTES: CABINET DEPTHS REPRESENT DIMENSION FROM INSIDE REAR TO FRONT FACE OF CABINETS, WITHOUT TRIM. ACTUAL WORKING DEPTH WILL BE LESS THAN DIMENSION SHOWN UNLESS OTHERWISE SPECIFIED.

Rev.#	Revision Description	Date	Rev'd	App'vd
3				
2				
1	.	.	.	.

Stock/Job#: .	Drawing# 23-1-2168-SW-103	Cust. App'v/Date# .	Deal'r App'v/Date: .
Osage Dealer: .	Osage Industries, Inc.		
End Customer: .	TWIN RIDGE ROAD P.O. BOX 718 LINN, MO. 65051		
NOTICE	Drawn By: S.A.H.	Date: 11-15-21	Scale: NOT TO SCALE
This drawing and/or the information hereon is the exclusive property of Osage Industries and shall not be reproduced, used or disclosed without the authorized written consent of Osage Industries.	Drawing Description: CURBSIDE INTERIOR TYPE-I SUPER-WARRIOR		Revision# 1

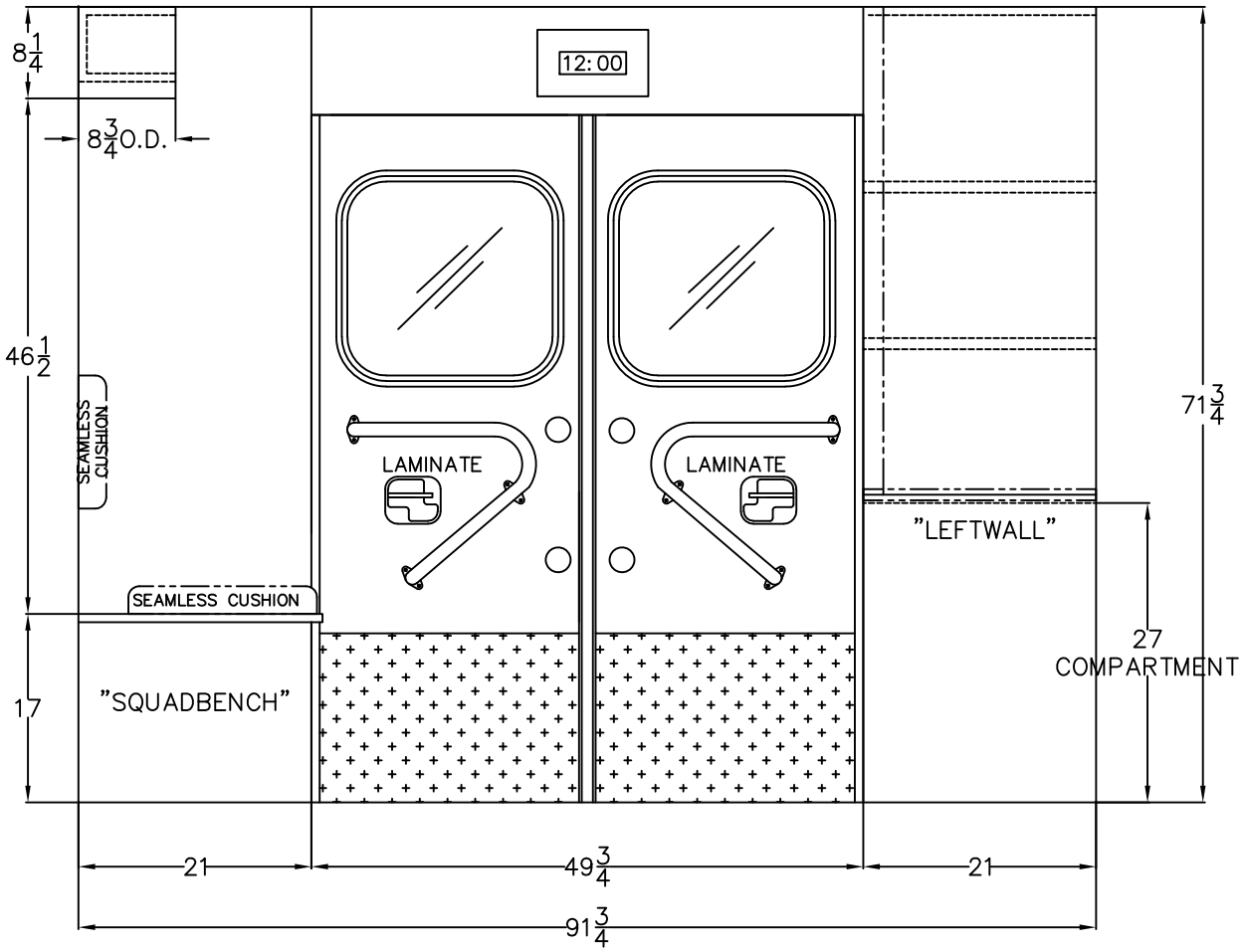

NOTES: THIS DRAWING IS NOT TO SCALE.
CHARACTERISTICS AND DIMENSIONS OF FINISHED PRODUCT MAY VARY.

NOTES: CABINET DEPTHS REPRESENT DIMENSION FROM INSIDE REAR TO FRONT FACE OF CABINETS, WITHOUT TRIM. ACTUAL WORKING DEPTH WILL BE LESS THAN DIMENSION SHOWN UNLESS OTHERWISE SPECIFIED.

Rev.#	Revision Description	Date	Rev'd	App'vd
3				
2				
1	.	.	.	.

Stock/Job#: .	Drawing# 23-1-2168-SW-104	Cust. App'v/Date# .	Deal'r App'v/Date: .
Osage Dealer: .	Osage Industries, Inc.		
End Customer: .	TWIN RIDGE ROAD P.O. BOX 718 LINN, MO. 65051		
NOTICE	Drawn By: S.A.H.	Date: 11-15-21	Scale: NOT TO SCALE
This drawing and/or the information hereon is the exclusive property of Osage Industries and shall not be reproduced, used or disclosed without the authorized written consent of Osage Industries.	Drawing Description: REARWARD INTERIOR TYPE-I SUPER-WARRIOR		Revision# 1

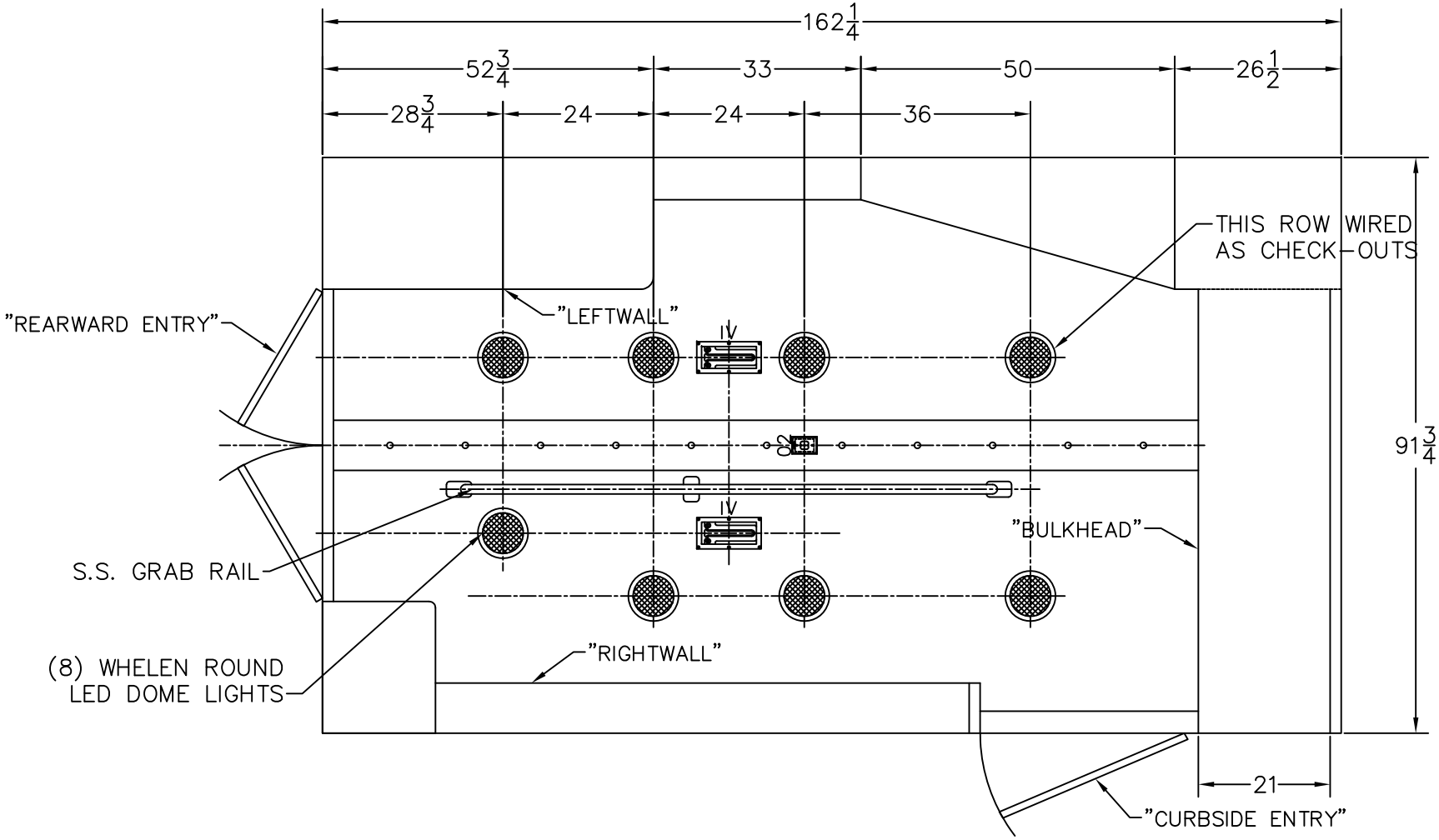

NOTES: THIS DRAWING IS NOT TO SCALE. CHARACTERISTICS AND DIMENSIONS OF FINISHED PRODUCT MAY VARY.

Rev.#	Revision Description	Date	Rev'd	App'vd
3				
2				
1	.	.	.	.

Stock/Job#: .	Drawing# 23-1-2168-SW-105	Cust. App'v/Date# .	Deal'r App'v/Date: .
Osage Dealer: .	Osage Industries, Inc.		
End Customer: .	TWIN RIDGE ROAD P.O. BOX 718 LINN, MO. 65051		
NOTICE	Drawn By: S.A.H.	Date: 11-15-21	Scale: NOT TO SCALE
This drawing and/or the information hereon is the exclusive property of Osage Industries and shall not be reproduced, used or disclosed without the authorized written consent of Osage Industries.	Drawing Description: CEILING LAYOUT TYPE-I SUPER-WARRIOR		Revision# 1

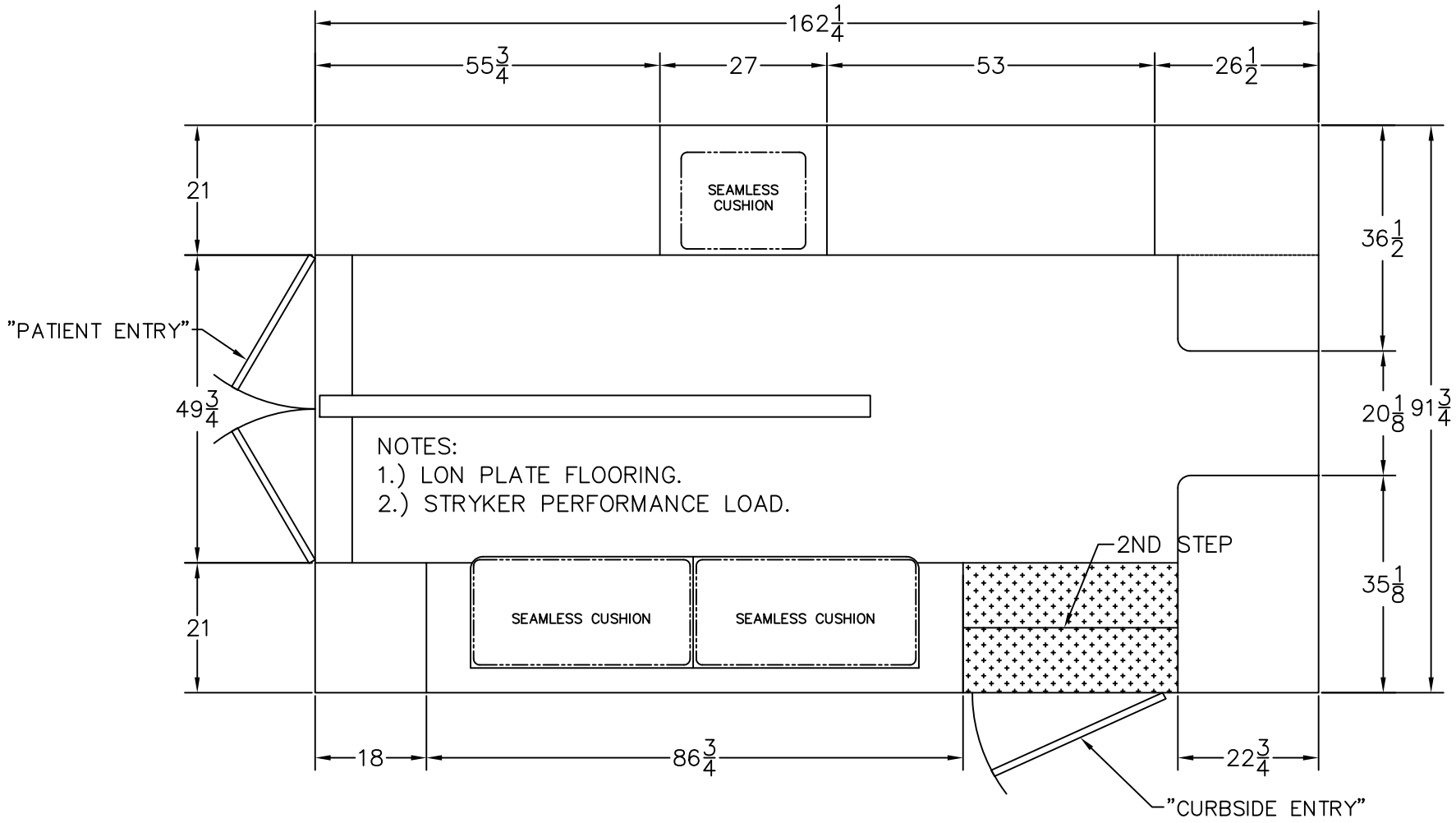

NOTES: THIS DRAWING IS NOT TO SCALE.
CHARACTERISTICS AND DIMENSIONS OF FINISHED PRODUCT MAY VARY.

Stock/Job#:	Drawing#	Cust. App'v/Date#	Deal'r App'v/Date:
.	23-1-2168-SW-106	.	.

Osage Dealer: .

End Customer: .

Osage Industries, Inc.
TWIN RIDGE ROAD P.O. BOX 718 LINN, MO. 65051

Drawn By:	Date:	Scale:
S.A.H.	11-15-21	NOT TO SCALE

NOTICE

This drawing and/or the information hereon is the exclusive property of Osage Industries and shall not be reproduced, used or disclosed without the authorized written consent of Osage Industries.

Drawing Description:

FLOOR LAYOUT
TYPE-I SUPER-WARRIOR

Revision#: 1

Rev.#	Revision Description	Date	Rev'd	App'vd
3				
2				
1	.	.	.	.

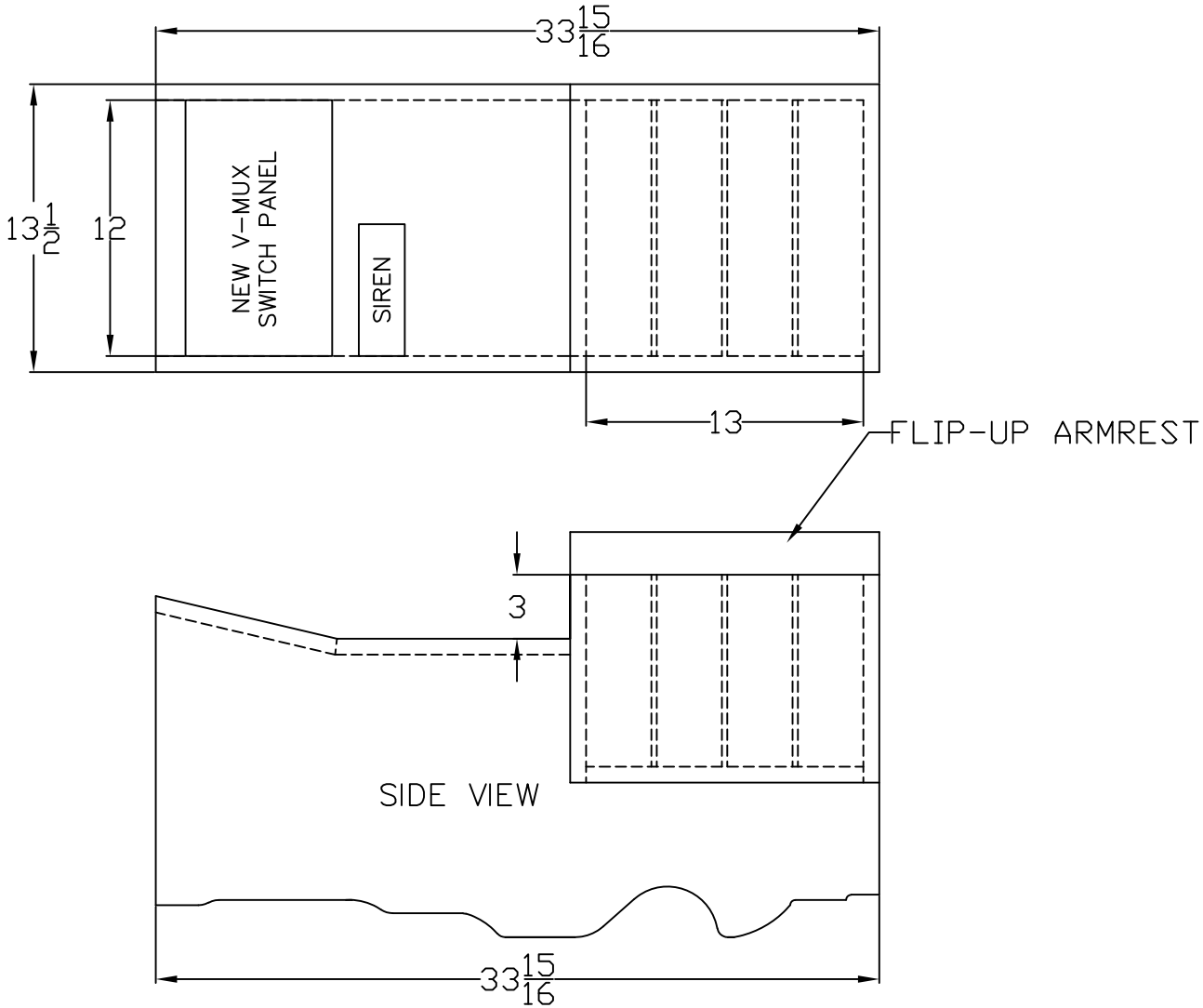

NOTES: THIS DRAWING IS NOT TO SCALE. CHARACTERISTICS AND DIMENSIONS OF FINISHED PRODUCT MAY VARY.

Stock/Job#:	Drawing#	Cust. App'v/Date#	Deal'r App'v/Date:
Osage Dealer:	.23-1-2168-SW-107A	.	.
End Customer:	Osage Industries, Inc. TWIN RIDGE ROAD P.O. BOX 718 LINN, MO. 65051		

Rev.#	Revision Description	Date	Rev'd	App'vd
3				
2				
1	PRODUCTION DRAFT	.	SAH	.

NOTICE

This drawing and/or the information hereon is the exclusive property of Osage Industries and shall not be reproduced, used or disclosed without the authorized written consent of Osage Industries.

Drawn By:	Date:	Scale:
S.A.H.	11-15-21	NOT TO SCALE

Drawing Description:

OSAGE RADIO CONSOLE
TYPE I, PASS-THROUGH

Revision#: 1

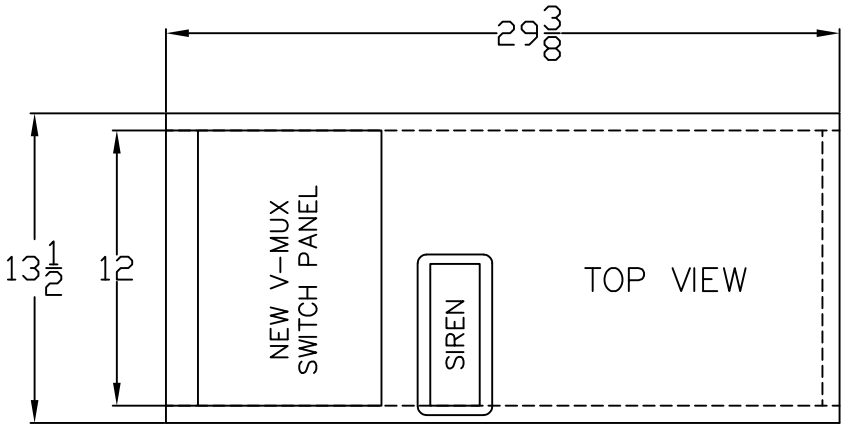

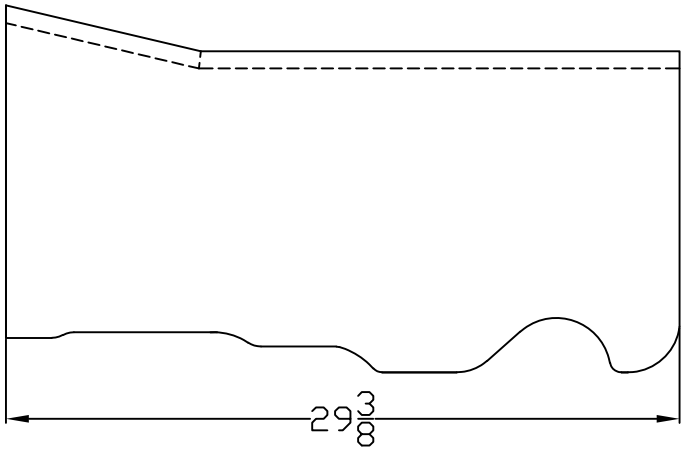

NOTES: THIS DRAWING IS NOT TO SCALE.
CHARACTERISTICS AND DIMENSIONS OF
FINISHED PRODUCT MAY VARY.

Stock/Job#:	Drawing#	Cust. App'v/Date#	Deal'r App'v/Date:
Osage Dealer: .	23-1-2168-SW-107B	.	.
End Customer: .	Osage Industries, Inc. TWIN RIDGE ROAD P.O. BOX 718 LINN, MO. 65051		

Rev.#	Revision Description	Date	Rev'd	App'vd
3				
2				
1	PRODUCTION DRAFT	.	SAH	.

NOTICE

This drawing and/or the information hereon is the exclusive property of Osage Industries and shall not be reproduced, used or disclosed without the authorized written consent of Osage Industries.

Drawn By:	Date:	Scale:
S.A.H.	11-15-21	NOT TO SCALE

Drawing Description:

OSAGE RADIO CONSOLE
TYPE I, CRAWL-THROUGH

Revision#: 1